LOS ALAMOS

INCORPORATED COUNTY OF LOS ALAMOS
SERVICES AGREEMENT

This **SERVICES AGREEMENT** ("Agreement") is entered into by and between the **Incorporated County of Los Alamos**, an incorporated county of the State of New Mexico ("County"), and **Wagner Equipment,** a Colorado corporation ("Contractor"), to be effective for all purposes April 3, 2019.

WHEREAS, the County Purchasing Agent determined in writing that the use of competitive sealed bidding was either not practical or not advantageous to County for procurement of the Services and County issued Request for Proposals No. 19-39 ("RFP") on February 3, 2019, requesting proposals for Pajarito Well No. 4 Natural Gas Engine Replacement ("Project"), as described in the RFP; and

WHEREAS, Contractor timely responded to the RFP by submitting a response dated March 4, 2019 ("Contractor's Response"); and

WHEREAS, based on the evaluation factors set out in the RFP, Contractor was the successful Offeror for the services listed in the RFP; and

WHEREAS, the Board of Public Utilities approved this Agreement at a public meeting held on March 20, 2019; and

WHEREAS, the County Council approved this Agreement at a public meeting held on April 2, 2019; and

WHEREAS, Contractor shall provide the Services, as described below, to County.

NOW, THEREFORE, for and in consideration of the premises and the covenants contained herein, County and Contractor agree as follows:

SECTION A. SERVICES:

1. **Replacement of Existing Engine with New Engine**. Contractor shall replace the existing Natural Gas Engine at Pajarito Well No. 4 ("Existing Engine") with a new Caterpillar G3508J Natural Gas Engine Rated at 690 BHP @ 1,400 RPM and ancillary supporting equipment ("New Engine") as proposed in the Contractor's Response. Contractor's Response is attached hereto as Exhibit "A," and made a part of hereof for all purposes. Contractor shall deliver New Engine, complete in place, which includes but is not limited to successful installation, testing and fully operational, meeting the performance specifications and criteria described below.
   a. Contractor shall provide and successfully install new batteries sized appropriately for New Engine.
   b. Contractor shall provide and successfully install new clutch and drive assembly for New Engine.

c. Scope of this Agreement includes a new angle gear drive, if necessary. Contractor shall evaluate the condition and integrity of the existing angle drive and determine if the existing drive can remain in service. If it is determined that a new angle gear drive is necessary, it is included in the Services and Compensation identified in Sections A and C, herein, respectively. If it is determined that the existing angle drive can remain in service, a credit of FORTY-FIVE THOUSAND DOLLARS ($45,000.00) shall be applied to the Agreement by amendment.
d. Contractor shall provide and successfully install a new Process Logical Control ("PLC") control box for New Engine and successfully integrate to existing control/SCADA system.
e. Contractor shall provide and successfully install a New Engine exhaust system compliant with all New Mexico Environment Department ("NMED") Requirements.
f. Contractor shall perform all work associated with the correct and complete installation of the New Engine and removal of the Existing Engine, including but not limited to all necessary rigging, lifting, hoisting equipment, and transport.
g. Contractor shall properly and completely remove and dispose Existing Engine and incidental auxiliary equipment. All materials shall be disposed of in an environmentally responsible and lawful manner.
h. Ownership transfer of Existing Engine and incidental auxiliary equipment to Contractor, and New Engine and new equipment to County, shall be completed at the time of successful commissioning of the all new equipment included in the Project.
i. Contractor is solely responsible for verifying all dimensions of existing building, equipment, piping and existing equipment specifications and characteristics for successful installation of all new equipment included in the Project. Custom fabrication of new components may be required and are incidental to and included in the Project.
j. Contractor is solely responsible for design and successful installation of water cooling system, which may include a new system or modification to the existing water cooling system.

2. Air Quality Emissions to Meet NMED Requirements

a. Contractor shall be solely responsible for design and installation of exhaust system for New Engine, compliant with NMED Requirements.
b. Contractor shall provide County all information required by NMED to permit the New Engine installation, including but not limited to: technical support to County, calculations, emission, and exhaust design/as-built, at the time Contractor provides County with the equipment submittals.

3. Available Gas Supply

a. Contractor shall provide County Project Manager load, pressure and quality specifications for natural gas required for New Engine.

4. Equipment Mounting and Building Penetrations

a. Any building penetrations, including but not limited modifications to exhaust vents or wiring penetrations, required are incidental to work and shall be completed by Contractor per applicable building codes.
b. Mounting hardware and associated labor to fasten/mount new equipment and modifications to existing concrete slab/mounting platform are incidental to work.

5. Commissioning / Start UP

a. Contractor shall prepare and provide to County Project Manager for review/approval, at least four (4) weeks prior to commissioning all new equipment included in the Project, a Commissioning and Test Plan for the start-up of the New Engine. At a minimum, the Commissioning and Test Plan shall include specifications for acceptable:
   (1) Alignment
   (2) Vibration
   (3) Temperatures
   (4) Emission Requirements
   (5) All manufacturer recommended tests, as determined by manufacturer specifications and industry standards.

b. Contractor shall provide all necessary test equipment.

c. Contractor shall provide qualified technicians to perform all testing. Contractor's technicians shall perform all testing.

d. Equipment with test results not meeting test plan criteria shall be corrected by Contractor until successful testing is achieved.

e. A commissioning report shall be certified by Contractor.

6. General Requirements

a. Contractor shall provide submittals of all major equipment identified in Section A(1) to County prior to Contractor's procurement of such equipment.

b. Contractor shall ensure all existing systems including but not limited to:
   (1) Cooling System capacity, piping sizing, dimensions;
   (2) Power supply available;
   (3) Mounting features;
   (4) Building dimensions;
   (5) Doorway openings;
   (6) Controls and SCADA;
   (7) Natural gas supply;
   (8) Mechanical clutch;
   (9) Angle gear drive; and
   (10) Equipment direction of rotation and RPM, are compatible with power supply, and the equipment provided by Contractor included in the Project are fitted appropriately.

c. For all Caterpillar equipment and parts purchased by Company under this Agreement, the Caterpillar Standard Warranty ("Cat Warranty") applies and Contractor represents that is has the authority to pass through the Cat Warranty to Company.

d. Contractor shall provide County all O&M Manuals and as-built drawings in .PDF format and three (3) paper copies for:
   (1) O&M Manuals for all new equipment;
   (2) Modified cooling system;
   (3) New Engine and exhaust;
   (4) Modifications to gas piping;
   (5) Custom fabricated components;
   (6) Angle Drive;
   (7) PLC/controls; and
   (8) Clutch.

e. Contractor shall be responsible for all safety practices in compliance with local, state and federal regulations and requirements.
f. Contractor and/or its subcontractors shall be appropriately licensed by the State of New Mexico for all work to be performed under this Agreement and be registered online with the New Mexico Workforce Solutions.
g. Wage rate determination LA-19-0158-A has been issued for the Project and provided on the project FTP site.
h. All Contractor personnel working on the Project shall acquire a LANL badge to access the site. All Contractor personnel shall be United States citizens. All large trucks are required to be inspected at the LANL checkpoint on East Jemez Road (Truck Route).
i. Contractor shall submit for County's approval, a proposed Schedule of Project Completion, showing specific relevant mile stones and other such items, within thirty (30) days of effective date of this Agreement.

SECTION B. TERM: The term of this Agreement shall commence April 3, 2019 and shall continue through December 31, 2019, or upon Contractor's successful completion of the Project whichever timeframe is greater, but in no circumstances shall continue beyond June 30, 2020, unless sooner terminated, as provided herein.

SECTION C. COMPENSATION:

1. **Amount of Compensation**. County shall pay compensation for performance of the Services in an amount not to exceed SEVEN HUNDRED FORTY-EIGHT THOUSAND SEVENTY-FIVE DOLLARS ($748,075.00), which amount does not include applicable New Mexico gross receipts taxes ("NMGRT").
2. **Monthly Invoices**. Contractor shall submit itemized monthly invoices to County's Project Manager showing amount of compensation due, amount of any NMGRT, and total amount payable. Payment of undisputed amounts shall be due and payable thirty (30) days after County's receipt of the invoice.

SECTION D. TAXES: Contractor shall be solely responsible for timely and correctly billing, collecting and remitting all NMGRT levied on the amounts payable under this Agreement.

SECTION E. STATUS OF CONTRACTOR, STAFF, and PERSONNEL: This Agreement calls for the performance of services by Contractor as an independent contractor. Contractor is not an agent or employee of County and shall not be considered an employee of County for any purpose. Contractor, its agents or employees shall make no representation that they are County employees, nor shall they create the appearance of being employees by using a job or position title on a name plate, business cards, or in any other manner, bearing the County's name or logo. Neither Contractor nor any employee of Contractor shall be entitled to any benefits or compensation other than the compensation specified herein. Contractor shall have no authority to bind County to any agreement, contract, duty or obligation. Contractor shall make no representations that are intended to, or create the appearance of, binding County to any agreement, contract, duty, or obligation. Contractor shall have full power to continue any outside employment or business, to employ and discharge its employees or associates as it deems appropriate without interference from County; provided, however, that Contractor shall at all times during the term of this Agreement maintain the ability to perform the obligations in a professional, timely and reliable manner.

SECTION F. STANDARD OF PERFORMANCE: Contractor agrees and represents that it has and shall maintain the personnel, experience and knowledge necessary to qualify it for the particular duties to be performed under this Agreement. Contractor shall perform the Services described herein in accordance with a standard that exceeds the industry standard of care for performance of the Services.

SECTION G. DELIVERABLES AND USE OF DOCUMENTS: All deliverables required under this Agreement, including material, products, reports, policies, procedures, software improvements, databases, and any other products and processes, whether in written or electronic form, shall remain the exclusive property of and shall inure to the benefit of County as works for hire; Contractor shall not use, sell, disclose, or obtain any other compensation for such works for hire. In addition, Contractor may not, with regard to all work, work product, deliverables or works for hire required by this Agreement, apply for, in its name or otherwise, any copyright, patent or other property right and acknowledges that any such property right created or developed remains the exclusive right of County. Contractor shall not use deliverables in any manner for any other purpose without the express written consent of the County.

SECTION H. EMPLOYEES AND SUB-CONTRACTORS: Contractor shall be solely responsible for payment of wages, salary or benefits to any and all employees or contractors retained by Contractor in the performance of the Services. Contractor agrees to indemnify, defend and hold harmless County for any and all claims that may arise from Contractor's relationship to its employees and subcontractors.

SECTION I. INSURANCE: Contractor shall obtain and maintain insurance of the types and in the amounts set out below throughout the term of this Agreement with an insurer acceptable to County. Contractor shall assure that all subcontractors maintain like insurance. Compliance with the terms and conditions of this Section is a condition precedent to County's obligation to pay compensation for the Services and Contractor shall not provide any Services under this Agreement unless and until Contractor has met the requirements of this Section. County requires Certificates of Insurance or other evidence acceptable to County that Contractor has met its obligation to obtain and maintain insurance and to assure that subcontractors maintain like insurance. Should any of the policies described below be cancelled before the expiration date thereof, notice shall be delivered in accordance with the policy provisions. General Liability Insurance, Environmental Risk Insurance and Automobile Liability Insurance shall name County as an additional insured.

1. **General Liability Insurance:** ONE MILLION DOLLARS ($1,000,000.00) combined single limit per occurrence; TWO MILLION DOLLARS ($2,000,000.00) aggregate.
2. **Workers' Compensation:** In an amount as may be required by law. County may immediately terminate this Agreement if Contractor fails to comply with the Worker's Compensation Act and applicable rules when required to do so.
3. **Automobile Liability Insurance for Contractor and its Employees:** ONE MILLION DOLLARS ($1,000,000.00) combined single limit per occurrence; TWO MILLION DOLLARS ($2,000,000.00) aggregate on any owned, and/or non-owned motor vehicles used in performing Services under this Agreement.

SECTION J. RECORDS: Contractor shall maintain, throughout the term of this Agreement and for a period of six (6) years thereafter, records that indicate the date, time, and nature of the services rendered. Contractor shall make available, for inspection by County, all records, books

of account, memoranda, and other documents pertaining to County at any reasonable time upon request.

SECTION K. APPLICABLE LAW: Contractor shall abide by all applicable federal, state and local laws, regulations, and policies and shall perform the Services in accordance with all applicable laws, regulations, and policies during the term of this Agreement. In any lawsuit or legal dispute arising from the operation of this Agreement, Contractor agrees that the laws of the State of New Mexico shall govern. Venue shall be in the First Judicial District Court of New Mexico in Los Alamos County, New Mexico.

SECTION L. NON-DISCRIMINATION: During the term of this Agreement, Contractor shall not discriminate against any employee or applicant for an employment position to be used in the performance of the obligations of Contractor under this Agreement, with regard to race, color, religion, sex, age, ethnicity, national origin, sexual orientation or gender identity, disability or veteran status.

SECTION M. INDEMNITY: Contractor shall indemnify, hold harmless and defend County, its Council members, employees, agents and representatives, from and against all liabilities, damages, claims, demands, actions (legal or equitable), and costs and expenses, including without limitation attorneys' fees, of any kind or nature, arising from Contractor's performance hereunder or breach hereof and the performance of Contractor's employees, agents, representatives and subcontractors.

SECTION N. FORCE MAJEURE: Neither County nor Contractor shall be liable for any delay in the performance of this Agreement, nor for any other breach, nor for any loss or damage arising from uncontrollable forces such as fire, theft, storm, war, or any other force majeure that could not have been reasonably avoided by exercise of due diligence.

SECTION O. NON-ASSIGNMENT: Contractor may not assign this Agreement or any privileges or obligations herein without the prior written consent of County.

SECTION P. LICENSES: Contractor shall maintain all required licenses including, without limitation, all necessary professional and business licenses, throughout the term of this Agreement. Contractor shall require and shall assure that all of Contractor's employees and subcontractors maintain all required licenses including, without limitation, all necessary professional and business licenses.

SECTION Q. PROHIBITED INTERESTS: Contractor agrees that it presently has no interest and shall not acquire any interest, direct or indirect, which would conflict in any manner or degree with the performance of its services hereunder. Contractor further agrees that it shall not employ any person having such an interest to perform services under this Agreement. No County Council member or other elected official of County, or manager or employee of County shall solicit, demand, accept or agree to accept a gratuity or offer of employment contrary to Section 31-282 of the Los Alamos County Code.

SECTION R. TERMINATION:

1. **Generally**. County may terminate this Agreement with or without cause upon ten (10) days prior written notice to Contractor. Upon such termination, Contractor shall be paid for Services actually completed to the satisfaction of County as defined in Section C above. Contractor shall render a final report of the Services performed to the date of termination and shall turn over to County originals of all materials prepared pursuant to this Agreement.
2. **Funding**. This Agreement shall terminate without further action by County on the first day of any County fiscal year for which funds to pay compensation hereunder are not appropriated by the County Council. County shall make reasonable efforts to give Contractor at least ninety (90) days advance notice that funds have not been and are not expected to be appropriated for that purpose.

SECTION S. NOTICE: Any notices required under this Agreement shall be made in writing, postage prepaid to the following addresses, and shall be deemed given upon hand delivery, verified delivery by telecopy (followed by copy sent by United States Mail), or three (3) days after deposit in the United States Mail:

County:
Dennis Segura, Project Manager
Incorporated County of Los Alamos
1000 Central Avenue, Suite 130
Los Alamos, New Mexico 87544

Contractor:
Steve Kerns, Sales Manager
Wagner Equipment
4000 Osuna Road
Albuquerque, New Mexico 87109

SECTION T. INVALIDITY OF PRIOR AGREEMENTS: This Agreement supersedes all prior contracts or agreements, either oral or written, that may exist between the parties with reference to the services described herein and expresses the entire agreement and understanding between the parties with reference to said services. It cannot be modified or changed by any oral promise made by any person, officer, or employee, nor shall any written modification of it be binding on County until approved in writing by both County and Contractor.

SECTION U. CAMPAIGN CONTRIBUTION DISCLOSURE FORM: A Campaign Contribution Disclosure Form was submitted as part of the Contractor's Response and is incorporated herein by reference for all purposes. This Section acknowledges compliance with Chapter 81 of the Laws of 2006 of the State of New Mexico.

IN WITNESS WHEREOF, the parties have executed this Agreement on the date(s) set forth opposite the signatures of their authorized representatives to be effective for all purposes on the date first written above.

ATTEST

_____

NAOMI D. MAESTAS
COUNTY CLERK

INCORPORATED COUNTY OF LOS ALAMOS

BY: _____

TIMOTHY GLASCO, PE **DATE**
UTILITIES MANAGER

Approved as to form:

_____

J. ALVIN LEAPHART
COUNTY ATTORNEY

WAGNER EQUIPMENT, A COLORADO CORPORATION

BY: _____

NAME: _____ **DATE**
TITLE: _____

Exhibit "A"

Contractor's Response

Wagner Power Systems
4000 Osuna Road NE
Albuquerque, NM 87109

Monday, March 4, 2019

Carmela J. Salazar, Senior Buyer/Planner
Los Alamos County Procurement
101 Camino Entrada, Building 3
Los Alamos, New Mexico 87544

Subject: Los Alamos County Solicitation, RFP 19-39 Pajarito Well No. 4 Natural Gas Engine Replacement.

In accordance with the requirements set forth in solicitation RFP No. 19-39 Pajarito Well No. 4 Natural Gas Engine Replacement including amendments 1 & 2 as published by the Los Alamos County Procurement Division, we are pleased to offer the following equipment and installation services for consideration:

CATERPILLAR G3508J NATURAL GAS ENGINE RATED 690 BHP @ 1400 RPM

Engine power rating selection based on 750 hp right angle gear drive and 575 hp down hole pump power limits.

Standard Configuration:
The Caterpillar G3508J engine is a spark-ignited low emissions (lean burn) design that features the ADEM A3 system, providing integrated ignition, speed governing, protection and controls, including detonation-sensitive variable ignition timing, and integrated air/fuel ratio control. Requires a 24-volt DC auxiliary power source. Standard instrumentation and protection features, including shutdowns and alarms, outlined below.

Air Inlet System
Air Cleaner, axial flow, installed on top, facing front single element canister type with service indicator. Cleanable Air Filters. Round to Rectangular Shield

Advisor Panel -
Remote-mounted advisor panel providing control system inputs for engine operation. Includes 4" LCD screen for display of all major engine-operating parameters including control system diagnostic and event codes. Also includes colored lights indicating engine running, alarm, and shutdown conditions as well as prelube status. Provides for remote speed control. Display units are user selectable for English or metric. Intended for remote mounting. Shipped loose. CSA Class 1, Div 2, Group D approved. If this option is not selected, customer must provide wiring and control system inputs to run engine required control system inputs include engine start/stop switch, emergency stop, local speed control, and manual prelube switch. Product Link with supporting harness is included

Cooling System
JW Hose Inlet Connection

ATTACHMENT A

Wagner Power Systems
4000 Osuna Road NE
Albuquerque, NM 87109

JW Hose Outlet Connection
Jacket Water Thermostats and Housing.
Aftercooler Thermostats and Housing
Jacket Water Pump, gear driven, centrifugal, non-self-priming.
Aftercooler Water Pump, gear driven, centrifugal, non-self-priming.
Aftercooler Core for sea-air atmosphere.

Two stage charge air cooling, stainless steel
First stage JW cooled.
Second stage SCAC cooled.

Exhaust System
Exhaust Manifold, dry, bolted insulation heat shield
Exhaust Outlet:
276 mm I.D. (10.8 in).
12 through holes-13.8 mm dia. EQ SP, 320 mm bolt hole dia.

Flywheels & Flywheel Housings
Flywheel, SAE No. 21
Flywheel Housing, SAE No. 00
SAE Standard Rotation

Fuel System
Electronic Fuel Metering Valve.
Requires 55-345 kPa (8-50 psig) gas supply at the fuel inlet.
Gas Pressure Regulator, pilot valve operated
Gas Shut-off Valve (24V DC).
Fuel system is sized for 29.54 to 94.32 MJ/Nm3 (750 to 2395 btu/scf).

Ignition System
ADEM A3 system (includes detonation sensitive timing)
HAZARDOUS LOCATION CERTIFICATION (Class 1, Division 2, Group D)
Select Feature codes include Hazardous Location certification. Refer to feature code description. on certified for Class I, Electrical system and instrumentation certified for Class I, A3 Division 2, Group D hazardous location. Includes entire ADEM A3 system and advisor panel.

Lube System
Crankcase Breathers (top mounted)
Oil Cooler, No Air Prelube,
Simplex Oil Filter, RH.
Shallow Oil Pan,
Oil Sampling Valve, No Oil Drain,
Turbo Oil Accumulator
- Includes pneumatic accumulator and valves to
lubricate and cool the turbocharger after shutdown.
Oil Fill and Gauge, RH

ATTACHMENT A

Wagner Power Systems
4000 Osuna Road NE
Albuquerque, NM 87109

Crankcase Breathers (top mounted)
Oil Cooler,
Shallow Oil Pan,
Oil Sampling Valve,
Turbo Oil Accumulator
- Includes pneumatic accumulator and valves to lubricate and cool the turbocharger after shutdown.

Rails, engine mounting, 254 mm (10 in), industrial-type

Rear Power Take-Offs Clutch

Front Housing, two-sided,
Front Lower LH Accessory Drive,
Vibration Damper with Guard,
No Stub Shaft is provided in STD CF.

The following include DISPLAY, ALARM and SHUTDOWN.
- Low unfiltered oil pressure.
- Low filtered oil pressure.
- High coolant (water) temperature.
- High oil temperature.
- Engine speed (over speed).
- Battery voltage.
- Oil filter differential pressure.
- Manifold inlet air pressure.
- Detonation.
- Manifold inlet air temp (high).
- Coolant (water) JW outlet pressure.
- Coolant (water) JW inlet pressure.
- Left turbocharger inlet temp (high).
- Right turbocharger outlet temp (high).
- Cylinder port temperature (high).
- Cylinder port temperature deviation from avg. (high/low).
- Engine oil to engine coolant diff. temp.

The following are displayed only:
- Service Hours.
- Oxygen level sensor.

Starting System
Dual 24VDC electric starters

Barring Device

General
Paint, Caterpillar Yellow

ATTACHMENT A

Note: "Stationary Use Only Label": Effective January 2004, the US EPA Nonroad Mobile SI rule restricts the use of SI gas engines in the United States. Caterpillar's Gas Engines are not certified for mobile applications within the US and are to be used in "stationary use only" applications. All gas engines will have this label attached regardless of the dealer placing the order. US EPA SI Stationary NSPS Rule (40 CFR60 Subpart JJJJ): The rule applies to newly built engines. This standard regulates NOx, CO, and VOC in United States for spark ignited natural gas engines. It is the customer's responsibility to coordinate and complete site emissions testing and submit for a US EPA certificate of compliance.

Effective July 1, 2010, the US EPA will enforce "Stage 2" of the new Spark Ignited New Source Performance Standard (SI NSPS) for stationary engines rated equal to or above 500 bhp. Effective January 1, 2011, this standard will be required for engines rated below 500 bhp.

TORSIONAL VIBRATION ANALYSIS
Included for G3508J applications

Feature List

- LE-LEAN BURN 2010 NSPS / 0.5 G (EMISS20_I)

TECHNICAL: 0.5 gram NOx/bhp-hr (not to exceed).
REQUIRES: G3508J Engine 508GI18 or 508GI19.

NOTE: The as-shipped engine is capable of NSPS site compliance and requires the included oxidation catalyst.

- 690 BHP @ 1400 RPM 54 DEG AC (HPR0690_I)

TECHNICAL: Integrated air/fuel ratio control.
REQUIRES: G3508J Engine 508GI18 or 508GI19.

- G3508J LE-IND 1400/AFR-CORE (508GI19_I)

*** "STATIONARY USE ONLY" LABEL ***
Rating: 690 bhp w/o fan 54 deg - Gas Compression
Engine Rating: 690 bhp (54 deg C AC) @ 1400 rpm
TECHNICAL: Lean burn, Caterpillar ADEM A3 System with integrated air/fuel ratio control. 0.5 gram NOx/bhp-hr (not to exceed). LH barring device included. 50 ppm Maximum Allowable H2S.
REQUIRES: 690 bhp @ 1400 rpm, 54 deg C AC and, EMISS20 LE-Lean Burn 2010 NSPS.

- INDUSTRIAL/OEM (MSINDOE_I)

All engines utilized in off-highway stationary but predominantly mobile and OEM applications relating to agricultural, construction, mining, material handling, forestry and material handling applications including irrigation, pumps, ag. tractors, utility and specialty vehicles including ARFF vehicles, conveyers, above and underground mining equipment, air compressors drills, trenchers, grinders, chippers, shredders, off-highway trucks, construction and paving equipment, etc.

- PUMPS (NON-FIRE/IRR/PTR) (MSCIK38_I)

ATTACHMENT A

Includes concrete pumps, pressure washers, raw water waste pumps and general industrial pumps. Should not include irrigation, fire and petroleum/oil field pumps.

ADSD-NORTH AMERICA (ADSDNA_I)

Includes: Canada, United States, American Samoa.

ADVISOR DISPLAY PANEL (PNLADV2_S)

Shipped loose.
Advisor remote panel providing control system inputs for engine operation. Includes 4" LCD screen for display of all major engine-operating parameters including control system diagnostic and event codes. Also includes colored lights indicating engine running, alarm, and shutdown conditions as well as prelube status. Provides for remote speed control. Display units are user selectable for English or metric. Intended for remote mounting. Shipped loose. CSA Class 1, Div 2, Group D approved. Required control system inputs include engine start/stop switch, emergency stop, local speed control and manual prelube switch.

CHARGING ALT 24V 65 AMP-CSA (ALTCSA6_I)

CSA Approved
Belt driven. Heavy duty with integral regulator.
TECHNICAL: RH mounted.
REQUIRES: Upper Right Hand Accessory Drive ADURH24

UPPER RH ACCESSORY DRIVE W/ALT (ADURH24_I)

Provides an accessory drive in the front housing in the upper right hand. Will be required with the Caterpillar supplied Alternator
REQUIRES: Charging Alternator 24V 65 AMP-CSA ALTCSA6

LAN ADAPTER (LANADP1_S)

Ship Loose
TECHNICAL: provides a 12 pin adapter that provides a LAN connection from Product Link to customer Internet hardware.

FUEL FILTER (FULFL11_S)

Shipped loose.
Remote mounted gas filter for use upstream of engine fuel inlet. Filter selected to provide no greater than 2 kPa (0.3 psi) initial pressure differential with new element for 172 kPa (25 psi) or greater gas supply at rated flow. Maximum working pressure of 450 kPa (65 psi). Comes with one element designed to filter 1 micron particle size. 1.5" NPI filter inlet/outlet connections. Manufactured in accordance with European Pressure Equipment Directive (PED). FOR USE WITH: Dry pipeline natural gas.

AIR CLEAN-OFFSET TURBO G3508J (ACLSD29_I)

Installed
Allows air cleaner to be installed without interfering with most driven equipment

ATTACHMENT A

TECHNICAL: Standard duty air cleaner, axial flow, offset from turbo, Single element canister type with service indicator, Cleanable air filters.

OIL PAN DRAIN (OILDRN6_I)

TECHNICAL: Includes 2-11 1/2 NPTF threaded female connection for customer connection.

LUBRICATING OIL ULTRA (LUBOL13_I)

Engine shipped filled with oil.
TECHNICAL: Cat NGEO, 40 Wt, 215 L (57 gal)

AIR INLET ADAPTER-ROUND (AIARO05_S)

TECHNICAL: Shipped loose. For remote air inlets. Adapts air cleaner inlet to 305 mm (12 in) round outside diameter inlet.

CRANKCASE COVERS (NOEXRV9_I)

Provides crankcase covers, no explosion relief valve covers are provided.

SINGLE DAMPER-GUARD-23 (SNDGD03_I)

Provide 23-inch damper with nonmetallic guard
TECHNICAL: To be used when additional damping is required by TVA findings or by customer preference with a completed TVA showing acceptable results when configured with this damper

TORSIONAL ANALYSIS INDUSTRIAL (TVAIND1_I)

TECHNICAL: Torsional vibration analysis (TVA) of engine drive applications. ** A complete set of technical data (see below) must be submitted to Caterpillar before calculations are undertaken. The report will include a mathematical determination of the natural frequency, critical speeds, relative amplitudes of angular displacement, and approximate nodal locations of the complete elastic system (both engine and driven equipment).

NOTE: Consult factory on compound and tandem installations. There may be additional charges for analyses of applications where more than one engine drives a single load. A separate torsional analysis is required for each engine with different driven equipment in multiple engine installations.

AMARILLO® RIGHT ANGLE GEAR DRIVE SH750A

Provide new Amarillo Right Angle Gear Drive model SH750A with heavy duty bi-directional oil pump, un-stretch the existing pump, remove the existing hear drive, install the new gear drive, provide and install the initial gear oil fill into the new gear, re-stretch the pump, and conduct a precision alignment of the drive shaft. Includes technical submittal and an IOM manual for the new gear drive.

If you wish to reuse the existing right angle gear drive “as is”, deduct $45,000 from the base price.

MURPHY® CENTURION C5 CONTROL PANEL

The Centurion configurable controller is a control and monitoring system. Primarily designed for engine driven compressors and pumps and is suited for many applications using standard

ATTACHMENT A

configurations to save money and reduce training. The control package will be custom designed for the Pajarito Well application. The Centurion continuously monitors input signals and set points and commands output to maintain proper operation. When an out of limit event occurs, the controller will stop, shutdown and control equipment to change conditions. The auto start capabilities of the Centurion allow for start/stop based on parameters such as pressure, level, or other set points. The Centurion provides real time data via communications ports to a connected display and or supervisory system. This advanced system offers multiple options for remote communications and operation including HMIs, PLC's, PCs and SCADA systems. The industry standard Modbus RTU protocol means greater support for a wide variety of communication equipment including radio and satellite communications systems.

HEAT EXCHANGER

Recondition and reuse existing or replace with new shell & tube or plate & frame heat exchanger.

COMBINATION EXHAUST SILENCER/OXIDATION CATALYST

Oxidation housing and catalyst
1-track residential grade silencer/catalyst combination housing with removable catalyst
Lid gasket included

Insulation blanket, silicone impregnated fiberglass outer cover, S.S. knitted wire mesh inner liner, S.S. capstan rivets with S.S. lacing wire fastening, sewn construction. Overall blanket temperature rating 1500°F/815°C

INSTALLATION SERVICES

Demolition of existing natural gas engine, exhaust system, cooling system, including removal and disposal of used equipment in a responsible manner.

Unload and install new equipment including setting and anchoring of new equipment on existing foundation, install new exhaust system, control panel, drive train, electrical system, 24VDC battery system. Insulate internal exhaust system piping. Includes badging and facilitating badging for our subs. Includes all shipping and handling, rigging, and crane services.

STARTUP, COMMISSIONING, OWNER/OPERATOR TRAINING

Perform precision alignment, setup and commission new engine and drive train system; provide hands-on training for owners operating personal, and provide technical support for new SCADA interface.

WARRANTY

Manufacturer's standard 1-year parts and labor

Extended warranty available for this product

MAINTENANCE SERVICES

None requested, none included. Custom maintenance services can be offered at any time.

ATTACHMENT A

Wagner Power Systems
4000 Osuna Road NE
Albuquerque, NM 87109

PRICE

Base price $748,075.00

Taxes are not included and where applicable shall be added at the time of invoicing.

DELIVERY

Submittals ..... 3 – 4 weeks
Estimated equipment delivery..... 12 – 16 weeks
Installation and commissioning..... 4 – 6 weeks

Please do not hesitate to contact us with questions or to request additional information. We sincerely appreciate this opportunity to offer our products and services.

Yours truly,

James Cumiford

Caterpillar Energy Solutions, Sales

Office (505) 343-2774 Mobile (505) 401-1560

Email: cumiford_james@wagnerequipment.com

ATTACHMENT A

G3508J Gas Engine

515 bkW (690 bhp) 1400 rpm
0.5 g/bhp-hr NOx (NTE)

Shown with optional equipment

Cat® Engine Specification
V-8, 4-Stroke-Cycle

Bore
170 mm (6.7 in)

Stroke
190 mm (7.5 in)

Displacement
34.5 L (2105 cu. in)

Aspiration
Turbocharged-2 Stage aftercooled

Digital Engine Management Governor and Protection
Electronic (ADEM™ A3)

Combustion
Lean Burn

Cooling System Capacity
Total ..... 135.3 L (36 gal)
JW ..... 124 L (33 gal)
SCAC .....11.3 L (3 gal)

Lube Oil System (refill)
220 L (58 gal)

Oil Change Interval
1000 hrs

Rotation (from flywheel end)
Counterclockwise

Flywheel
SAE No.21

Flywheel Housing
SAE No.00

Flywheel Teeth
183

FEATURES AND BENEFITS

Engine Design
- Engine design built on G3500 LE proven reliability and durability
- Ability to burn a wide spectrum of gaseous fuels
- Robust diesel strength design prolongs life and lowers owning and operating costs
- Broad operating speed range at lower site air density (high altitude/ hot ambient temperatures)
- Higher power density improves fleet management
- Quality engine diagnostics
- Detonation-sensitive timing control for individual cylinders

Ultra Lean Burn technology (ULB)
- ULB technology uses an advanced control system, a better turbo match, improved air and fuel mixing, and a more sophisticated combustion recipe to provide:
  - Lowest engine-out emissions
  - Highest fuel efficiency
  - Improved altitude and speed turndown
  - Stable load acceptance and load rejection

Emissions
- Meets U.S. EPA Spark Ignited Stationary NSPS emissions for 2010 and some non-attainment areas
- Lean air/fuel mixture provides best available emissions and fuel efficiency for engines of this bore size

Advanced Digital Engine Management
- ADEM A3 engine management system integrates speed control, air/fuel ratio control, and ignition/detonation controls into a complete engine management system. ADEM A3 has improved: user interface, display system, shutdown controls, and system diagnostics.

Full Range of Attachments
- Large variety of factory-installed engine attachments reduces packaging time

Testing
- Every engine is full-load tested to ensure proper engine performance.

Gas Engine Rating Pro
- GERP is a PC-based program designed to provide site performance capabilities for Cat® natural gas engines for the gas compression industry. GERP provides engine data for your site's altitude, ambient temperature, fuel, engine coolant heat rejection, performance data, installation drawings, spec sheets, and pump curves.

Product Support Offered Through Global Cat Dealer Network
- More than 2,200 dealer outlets
- Cat factory-trained dealer technicians service every aspect of your petroleum engine
- Cat parts and labor warranty
- Preventive maintenance agreements available for repair before-failure options
- S•O•S℠ program matches your oil and coolant samples against Caterpillar set standards to determine:
  - Internal engine component condition
  - Presence of unwanted fluid
  - Presence of combustion by-products
  - Site-specific oil change interval

Web Site
For all your Oil & Gas power requirements, visit www.cat.com/oilandgas

BUILT FOR IT.™

ATTACHMENT A
Services Agreement No. AGRA9-39
Wagner Equipment
Exhibit "A"

CAT®

STANDARD EQUIPMENT

G3508J Gas Engine

Air Inlet System
Axial flow air cleaners
Single element canister type with service indicator

Cooling System
Two-stage charge air cooling:
First stage — JW + OC + 1st stage AC
Second stage — 2nd stage AC
Jacket water and aftercooler thermostats

Exhaust System
Water-cooled exhaust manifolds
Dry turbocharger housings
Water-cooled exhaust elbow

Flywheels and Housings
SAE No. 21 flywheel
SAE No. 00 flywheel housing
SAE standard rotation

Fuel System
7-40 psig gas supply
Electronic fuel metering valve
Gas pressure regulator
Gas shutoff valve

Instrumentation
Remote-mounted Advisor control panel
Product Link cellular radio

Mounting
Rails

Lubrication System
Crankcase breather - top mounted
Oil cooler
Oil filter - RH
Oil pan, capacity 58 gal
Oil sampling valve
Turbo oil accumulator

Power Take-Offs
Front housing, two sided
Front lower LH accessory drive

General
Paint — Cat yellow
Crankshaft vibration damper and guard

OPTIONAL EQUIPMENT

Air Inlet System
Rain shield
Round air inlet adapters

Charging System
CSA alternator (24V,65A)

Cooling System
Jacket water inlet flange-hose connection

Exhaust System
Flexible fittings
Elbow
Flanges

Fuel System
Fuel filter

Instrumentation
LAN adapter
15',40',90',140' Product Link extension harness
20',30',50',100' interconnect harness

Lubrication System
Lubricating oil
Oil bypass filter
Oil pan drain
Air prelube pump

Power Take-Offs
Front stub shaft
Crankshaft pulley

Starting System
Air pressure regulator
90 psi starter
150 psi starter
Jacket water heater

General
Special paint
Crankshaft vibration double damper
Explosion relief valves

EU Certification
EEC DOI certification

Torsional Vibration Analysis

G3508J Gas Engine

Performance Number		EM2758-00
Rating	g/bhp-hr	0.5 g NOx NTE
Engine Power	bkW (bhp)	515 (690)
Engine Speed	rpm	1400
Max Altitude @ Rated Torque and 38°C (100°F)	m (ft)	1524 (5000)
Speed Turndown @ Max Altitude, Rated Torque, and 38°C (100°F)	%	29
Temperature		
JW	°C (°F)	99 (210)
SCAC	°C (°F)	54 (130)
Emissions (NTE)*		
NOx	g/bkW-hr (g/bhp-hr)	0.67 (0.5)
CO	g/bkW-hr (g/bhp-hr)	3.46 (2.58)
CO_2	g/bkW-hr (g/bhp-hr)	640 (477)
VOC**	g/bkW-hr (g/bhp-hr)	0.74 (0.55)
Fuel Consumption ***	MJ/bkW-hr (Btu/bhp-hr)	10.26 (7254)
Heat Balance		
Heat Rejection to Jacket Water	bkW (Btu/min)	302 (17180)
Heat Rejection to Oil Cooler	bkW (Btu/min)	47 (2688)
Heat Rejection to Aftercooler		
Stage 1 (JW)	bkW (Btu/min)	73 (4142)
Stage 2 (SCAC)	bkW (Btu/min)	47 (2672)
Heat Rejection to Exhaust LHV To 25°C (77°F)	bkW (Btu/min)	444 (25225)
Heat Rejection to Atmosphere	bkW (Btu/min)	53 (3041)
Exhaust System		
Exhaust Gas Flow Rate	$N*m^3$/min (scfm)	422.5 (4007)
Exhaust Stack Temperature	°C (°F)	422 (792)
Intake System		
Air Inlet Flow Rate	$N*m^3$/min (scfm)	168 (1595)
Gas Pressure	kPag (psig)	48-276 (7-40)

All technical data is based on 100% load and speed
* listed as not to exceed
** Volatile organic compounds as defined in U.S. EPA 40 CFR 60, subpart JJJJ
*** ISO 3046/1

G3508J Gas Engine

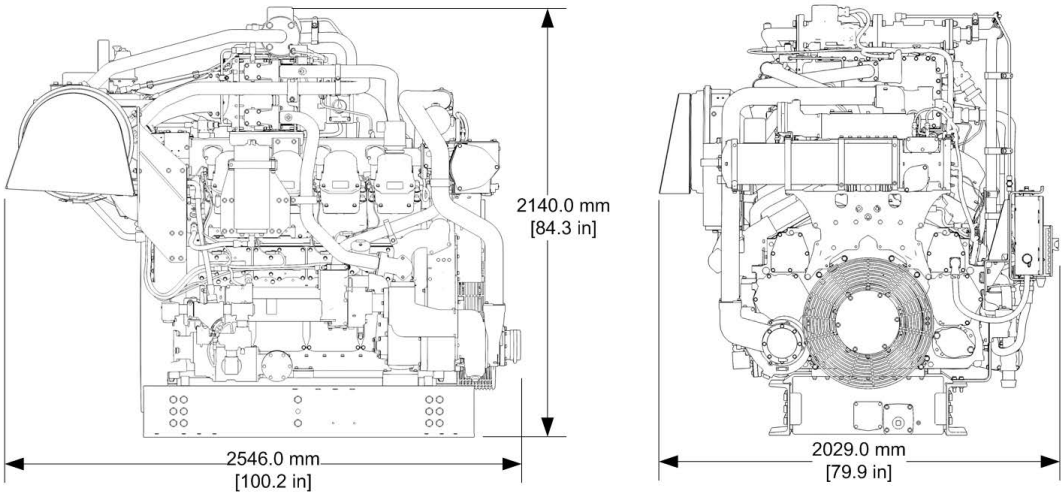

Note: General configuration not to be used for installation

Dimensions		
Length	2546 mm	100.2 in
Width	2029 mm	79.9 in
Height	2140 mm	84.3 in
Weight (wet)	6048 kg	13,306 lb

Rating Definitions and Conditions

Engine performance is obtained in accordance with SAE J1995, ISO3046/1, BS5514/1, and DIN6271/1 standards.

Conditions: Power for gas engines is based on fuel having an LHV of 33.74 kJ/L (905 Btu/cu ft) at 101 kPa (29.91 in Hg) and 15°C (59°F). Fuel rate is based on a cubic meter at 100 kPa (29.61 in Hg) and 15.6°C (60.1°F). Air flow is based on a cubic foot at 100 kPa (29.61 in Hg) and 25°C (77°F). Exhaust flow is based on a cubic foot at 100 kPa (29.61 in Hg) and stack temperature.

To find your nearest dealer, please visit: www.cat.com

Subject to change without notice.
LEHW0341-00

© 2018 Caterpillar All Rights Reserved. CAT, CATERPILLAR, their respective logos, "Caterpillar Yellow" and the POWER EDGE trade dress, as well as corporate and product identity used herein, are trademarks of Caterpillar and may not be used without permission.

Services Agreement No. AGR19-39
Wagner Equipment
Exhibit "A"
ATTACHMENT A

G3508J

CATERPILLAR®

GAS ENGINE SITE SPECIFIC TECHNICAL DATA
Los Alamos County
Pajarito Well No. 4

GAS COMPRESSION APPLICATION

ENGINE SPEED (rpm):	1400	RATING STRATEGY:	STANDARD
COMPRESSION RATIO:	8	RATING LEVEL:	CONTINUOUS
AFTERCOOLER TYPE:	SCAC	FUEL SYSTEM:	CAT WIDE RANGE WITH AIR FUEL RATIO CONTROL
AFTERCOOLER - STAGE 2 INLET (°F):	130		
AFTERCOOLER - STAGE 1 INLET (°F):	201	**SITE CONDITIONS:**	
JACKET WATER OUTLET (°F):	203	FUEL:	Nat Gas
ASPIRATION:	TA	FUEL PRESSURE RANGE(psig): (See note 1)	7.0-40.0
COOLING SYSTEM:	JW+OC+1AC, 2AC	FUEL METHANE NUMBER:	84.7
CONTROL SYSTEM:	ADEM3	FUEL LHV (Btu/scf):	905
EXHAUST MANIFOLD:	ASWC	ALTITUDE(ft):	7000
COMBUSTION:	LOW EMISSION	INLET AIR TEMPERATURE(°F):	86
NOx EMISSION LEVEL (g/bhp-hr NOx):	0.5	STANDARD RATED POWER:	690 bhp@1400rpm
SET POINT TIMING:	30		

				MAXIMUM RATING	SITE RATING AT MAXIMUM INLET AIR TEMPERATURE		
RATING		**NOTES**	**LOAD**	**100%**	**100%**	**75%**	**53%**
ENGINE POWER	(WITHOUT FAN)	(2)	bhp	690	651	488	345
INLET AIR TEMPERATURE			°F	64	86	86	86
ENGINE DATA							
FUEL CONSUMPTION (LHV)		(3)	Btu/bhp-hr	7395	7499	7966	8535
FUEL CONSUMPTION (HHV)		(3)	Btu/bhp-hr	8203	8318	8837	9468
AIR FLOW (@inlet air temp, 14.7 psia)	(WET)	(4)(5)	ft3/min	1556	1539	1193	875
AIR FLOW	(WET)	(4)(5)	lb/hr	7073	6711	5203	3817
FUEL FLOW (60ºF, 14.7 psia)			scfm	94	90	72	54
INLET MANIFOLD PRESSURE		(6)	in Hg(abs)	93.0	88.8	70.7	52.7
EXHAUST TEMPERATURE - ENGINE OUTLET		(7)	°F	792	792	799	836
EXHAUST GAS FLOW (@engine outlet temp, 14.5 psia)	(WET)	(8)(5)	ft3/min	4007	3804	2972	2248
EXHAUST GAS MASS FLOW	(WET)	(8)(5)	lb/hr	7330	6956	5399	3965
EMISSIONS DATA - ENGINE OUT							
NOx (as NO2)		(9)(10)	g/bhp-hr	0.50	0.50	0.50	0.50
CO		(9)(10)	g/bhp-hr	2.58	2.61	2.74	2.71
THC (mol. wt. of 15.84)		(9)(10)	g/bhp-hr	5.49	5.55	5.76	5.59
NMHC (mol. wt. of 15.84)		(9)(10)	g/bhp-hr	0.82	0.83	0.86	0.84
NMNEHC (VOCs) (mol. wt. of 15.84)		(9)(10)(11)	g/bhp-hr	0.55	0.56	0.58	0.56
HCHO (Formaldehyde)		(9)(10)	g/bhp-hr	0.42	0.43	0.46	0.48
CO2		(9)(10)	g/bhp-hr	477	483	511	547
EXHAUST OXYGEN		(9)(12)	% DRY	9.3	9.2	8.9	8.5
HEAT REJECTION							
HEAT REJ. TO JACKET WATER (JW)		(13)	Btu/min	17180	16762	14441	12556
HEAT REJ. TO ATMOSPHERE		(13)	Btu/min	3041	2926	2448	2028
HEAT REJ. TO LUBE OIL (OC)		(13)	Btu/min	2688	2622	2259	1964
HEAT REJ. TO A/C - STAGE 1 (1AC)		(13)(14)	Btu/min	6252	6252	4586	1827
HEAT REJ. TO A/C - STAGE 2 (2AC)		(13)(14)	Btu/min	2933	2933	2554	1724
COOLING SYSTEM SIZING CRITERIA							
TOTAL JACKET WATER CIRCUIT (JW+OC+1AC)		(14)(15)	Btu/min	28689			
TOTAL AFTERCOOLER CIRCUIT (2AC)		(14)(15)	Btu/min	3080			
A cooling system safety factor of 0% has been added to the cooling system sizing criteria.							

CONDITIONS AND DEFINITIONS

Engine rating obtained and presented in accordance with ISO 3046/1, adjusted for fuel, site altitude and site inlet air temperature. 100% rating at maximum inlet air temperature is the maximum engine capability for the specified fuel at site altitude and maximum site inlet air temperature. Maximum rating is the maximum capability at the specified aftercooler inlet temperature for the specified fuel at site altitude and reduced inlet air temperature. Lowest load point is the lowest continuous duty operating load allowed. No overload permitted at rating shown.

For notes information consult page three.

PREPARED BY: James Cumiford, Wagner Equipment Co.
Data generated by Gas Engine Rating Pro Version 6.09.01
Ref. Data Set EM2758-02-001, Printed 18Feb2019

Services Agreement No. ACR19-39
ATTACHMENT A
Wagner Equipment
Exhibit "A"

Engine Power vs. Inlet Air Temperature

Data represents temperature sweep at 7000 ft and 1400 rpm

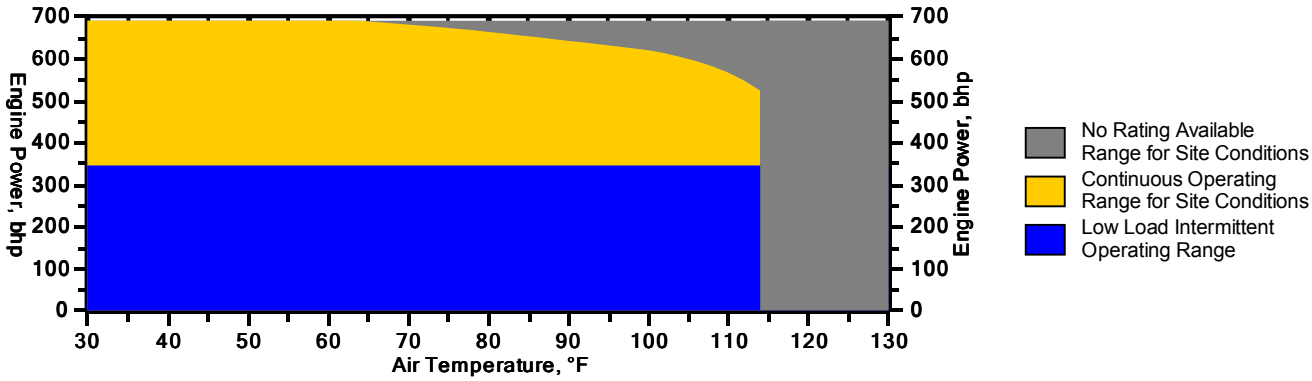

Engine Power vs. Engine Speed

Data represents speed sweep at 7000 ft and 86 ºF

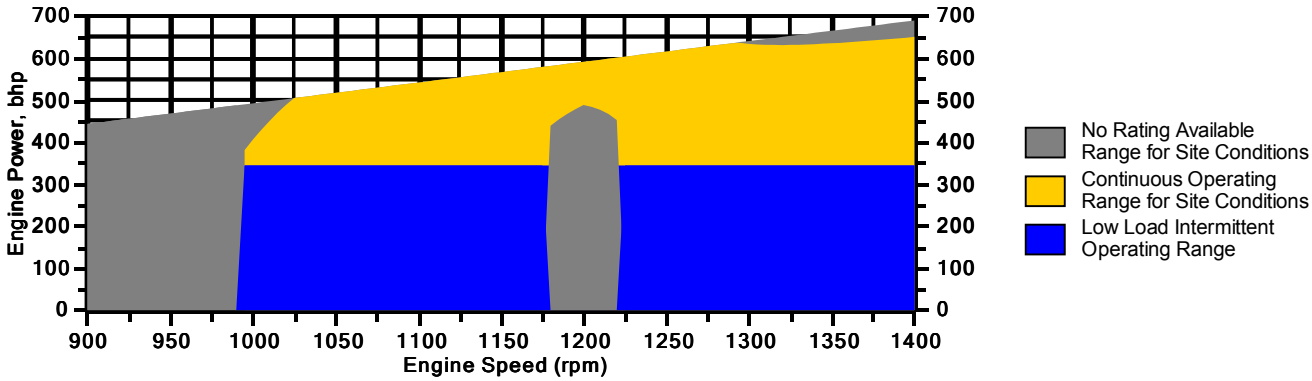

Engine Torque vs. Engine Speed

Data represents speed sweep at 7000 ft and 86 ºF

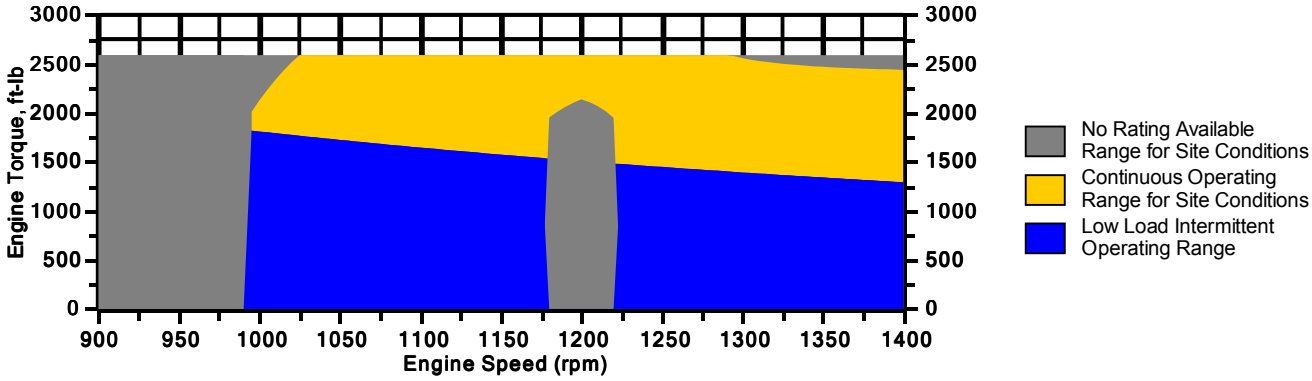

Note: At site conditions of 7000 ft and 86°F inlet air temp., constant torque can be maintained down to 1020 rpm. The minimum speed for loading at these conditions is 995 rpm.

PREPARED BY: James Cumiford, Wagner Equipment Co.
Data generated by Gas Engine Rating Pro Version 6.09.01
Ref. Data Set EM2758-02-001, Printed 18Feb2019

ATTACHMENT A
Services Agreement No. ACR19-39
Wagner Equipment
Exhibit "A"

NOTES

1. Fuel pressure range specified is to the engine fuel pressure regulator. Additional fuel train components should be considered in pressure and flow calculations.

2. Engine rating is with two engine driven water pumps. Tolerance is ± 3% of full load.

3. Fuel consumption tolerance is ± 3.0% of full load data.

4. Air flow value is on a 'wet' basis. Flow is a nominal value with a tolerance of ± 5 %.

5. Inlet and Exhaust Restrictions must not exceed A&I limits based on full load flow rates from the standard technical data sheet.

6. Inlet manifold pressure is a nominal value with a tolerance of ± 5 %.

7. Exhaust temperature is a nominal value with a tolerance of (+)63°F, (-)54°F.

8. Exhaust flow value is on a "wet" basis. Flow is a nominal value with a tolerance of ± 6 %.

9. Emissions data is at engine exhaust flange prior to any after treatment.

10. Values listed are higher than nominal levels to allow for instrumentation, measurement, and engine-to-engine variations. They indicate the maximum values expected under steady state conditions. Fuel methane number cannot vary more than ± 3. THC, NMHC, and NMNEHC do not include aldehydes. An oxidation catalyst may be required to meet Federal, State or local CO or HC requirements.

11. VOCs - Volatile organic compounds as defined in US EPA 40 CFR 60, subpart JJJJ

12. Exhaust Oxygen level is the result of adjusting the engine to operate at the specified NOx level. Tolerance is ± 0.5.

13. Heat rejection values are nominal. Tolerances, based on treated water, are ± 10% for jacket water circuit, ± 50% for radiation, ± 20% for lube oil circuit, and ± 5% for aftercooler circuit.

14. Aftercooler heat rejection includes an aftercooler heat rejection factor for the site elevation and inlet air temperature specified. Aftercooler heat rejection values at part load are for reference only. Do not use part load data for heat exchanger sizing.

15. Cooling system sizing criteria are maximum circuit heat rejection for the site, with applied tolerances.

ATTACHMENT A
Services Agreement No. ACR19-39
Wagner Equipment
Exhibit "A"

Constituent	Abbrev	Mole %	Norm
Water Vapor	H2O	0.0000	0.0000
Methane	CH4	92.2700	92.2700
Ethane	C2H6	2.5000	2.5000
Propane	C3H8	0.5000	0.5000
Isobutane	iso-C4H1O	0.0000	0.0000
Norbutane	nor-C4H1O	0.2000	0.2000
Isopentane	iso-C5H12	0.0000	0.0000
Norpentane	nor-C5H12	0.1000	0.1000
Hexane	C6H14	0.0500	0.0500
Heptane	C7H16	0.0000	0.0000
Nitrogen	N2	3.4800	3.4800
Carbon Dioxide	CO2	0.9000	0.9000
Hydrogen Sulfide	H2S	0.0000	0.0000
Carbon Monoxide	CO	0.0000	0.0000
Hydrogen	H2	0.0000	0.0000
Oxygen	O2	0.0000	0.0000
Helium	HE	0.0000	0.0000
Neopentane	neo-C5H12	0.0000	0.0000
Octane	C8H18	0.0000	0.0000
Nonane	C9H20	0.0000	0.0000
Ethylene	C2H4	0.0000	0.0000
Propylene	C3H6	0.0000	0.0000
TOTAL (Volume %)		100.0000	100.0000

Fuel Makeup:	Nat Gas
Unit of Measure:	English

Calculated Fuel Properties

Caterpillar Methane Number:	84.7
Lower Heating Value (Btu/scf):	905
Higher Heating Value (Btu/scf):	1004
WOBBE Index (Btu/scf):	1168
THC: Free Inert Ratio:	21.83
Total % Inerts (% N2, CO2, He):	4.38%
RPC (%) (To 905 Btu/scf Fuel):	100%
Compressibility Factor:	0.998
Stoich A/F Ratio (Vol/Vol):	9.45
Stoich A/F Ratio (Mass/Mass):	15.75
Specific Gravity (Relative to Air):	0.600
Fuel Specific Heat Ratio (K):	1.313

CONDITIONS AND DEFINITIONS

Caterpillar Methane Number represents the knock resistance of a gaseous fuel. It should be used with the Caterpillar Fuel Usage Guide for the engine and rating to determine the rating for the fuel specified. A Fuel Usage Guide for each rating is included on page 2 of its standard technical data sheet.

RPC always applies to naturally aspirated (NA) engines, and turbocharged (TA or LE) engines only when they are derated for altitude and ambient site conditions.

Project specific technical data sheets generated by the Caterpillar Gas Engine Rating Pro program take the Caterpillar Methane Number and RPC into account when generating a site rating.

Fuel properties for Btu/scf calculations are at 60F and 14.696 psia.

Caterpillar shall have no liability in law or equity, for damages, consequently or otherwise, arising from use of program and related material or any part thereof.

FUEL LIQUIDS

Field gases, well head gases, and associated gases typically contain liquid water and heavy hydrocarbons entrained in the gas. To prevent detonation and severe damage to the engine, hydrocarbon liquids must not be allowed to enter the engine fuel system. To remove liquids, a liquid separator and coalescing filter are recommended, with an automatic drain and collection tank to prevent contamination of the ground in accordance with local codes and standards.

To avoid water condensation in the engine or fuel lines, limit the relative humidity of water in the fuel to 80% at the minimum fuel operating temperature.

PREPARED BY: James Cumiford, Wagner Equipment Co.
Data generated by Gas Engine Rating Pro Version 6.09.01
Ref. Data Set EM2758-02-001, Printed 18Feb2019

ATTACHMENT A
Services Agreement No. ACR19-39
Wagner Equipment
Exhibit "A"

Centurion™

Configurable Control Panel

The Centurion Configurable Control Panel (C4) is a hybrid of an annunciator and compressor controller. The C4 combines the monitoring and shut-down features of an annunciator, with auto-start and basic engine controls that help prevent shutdowns.

The panel is PC configurable and USB compatible. No programming experience is required for this panel.

Specifications

Power Input: 10 -32 VDC
Operating Temp: -40° to 185° F (-40° to 85° C)
Configuration: PC-based Centurion Configuration Software

Display Module (Head): Choose from
Standard MV-5-C LCD with graphic display
Standard full-color VGA 6 in. or 10 in. touchscreen
Main I/O Module: C4-1-A: 32 DI, 10 DO, 12 AI, 8 TC, 2 AO, 1 MPU
Expansion Module: MX4: 18 TC (Type J or K). MX5-A: 6 DO, 8 AI, 4 AO, 1 MPU

DI=Digital Input; DO=Digital Output; AI=Analog Input; AO=Analog Output; TC=Thermocouple Input; MPU=Magnetic Pick Up Input; RTD=Resistive Temperature Device

C4-1-A Main I/O Module

- All I/O options individually software selectable. No jumpers required
- 32 optically isolated DC digital inputs: NO or NC, (active high/active low), non-incendive
  - LED indicators
  - Approved for use with general purpose switches in hazardous areas
- 12 analog inputs: 0-24 mA or 0-5 VDC , 10-bit hardware
- Eight thermocouples
  - Open thermocouple
  - Cold junction compensation
- One magnetic pickup input/AC run signal: 30 to 10 kHz, 4.5 VAC rms min, 120 VAC rms max.
- 10 digital outputs:
- LED indicators
  - 4 relay outputs, form C, dry contacts
  - 4 FET outputs (source)
  - 2 FET outputs (sink)
- Two analog outputs
  - 4-20mA, 16-bit hardware
- 3 Communication Ports:

Port 1 (SERIAL):
- Interface: RS232 or RS485
- Protocol: MODBUS RTU (slave)

Port 2 (SERIAL):
- Interface: RS232 or RS485
- Protocol: MODBUS RTU (slave), proprietary (configuration transfer)

Port 2 (USB): Interface: USB 1.1 compliant port emulating RS232 communications via PC driver
- Protocol/Services: MODBUS RTU (slave), proprietary (configuration transfer)
- Connection: USB Type B connector
- Automatic selection of USB when a signal is detected on the USB Type B connector

Port 3: Interface: CAN bus
- Protocol/Services: Proprietary communications for expansion I/O module support

In order to consistently bring you the highest quality, full-featured products, we reserve the right to change our specifications and designs at any time. FW MURPHY product names and the FW MURPHY logo are registered trademarks. This document, including textual matter and illustrations, is copyright protected with all rights reserved. (c) 2019 FW MURPHY. A copy of our limited warranty may be viewed or printed by going to www.fwmurphy.com/warranty.

ATTACHMENT A
Wagner Equipment
Exhibit "A"

MV-5-C Display Module with Graphical LCD

- Operating temperature: -40° to 185° F (-40° to 85° C)
- 320 x 240 pixels, LCD display with backlight
- 12-key keypad for user interface for set point entry, alarm acknowledgment, start, stop, reset, etc.
- Communications
  - RS232/RS485-1 (MODBUS RTU master)
  - RS485-2 (MODBUS RTU slave)
  - USB 1.1 compliant ports
  - Type A (reserved)
  - Type B (firmware updates)
  - CAN 1/2 (reserved)
- Customizable process screens (up to nine)
  - Line by line
  - Gage
  - Control loop
  - Generic register

Full-Color VGA Touch Screen

- Operating temperature: 32 to 122° F (0 to 50° C)
- Full-color VGA touch screen (resistive analog)
- 6” standard offering, 10” upgrade
- Data logging - 2 GB memory card
- Data log transfer on the fly
- Communications
  - Serial RS232 - 2
  - Serial RS485 - 1
  - USB 1.1 - 1
  - Ethernet (several protocols supported including, but not limited to MODBUS TCP, TCP/IP Internet Web server)
- Five-button keypad for on screen menus (6”)
- Eight-button keypad for on-screen menus (10”)
- Standard screen offerings
- Front panel power LED
- 24 VDC powered

Dimensions

MV-5-C

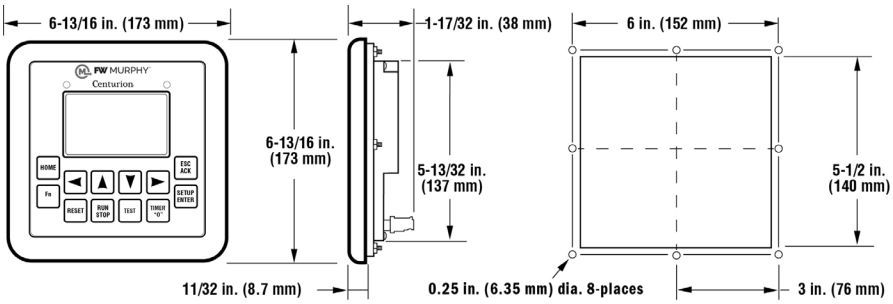

6-Inch VGA Touch Screen

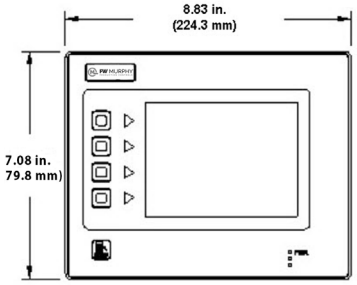

Unit is 2.3 in. (58.4 mm) deep.

C4-1-A

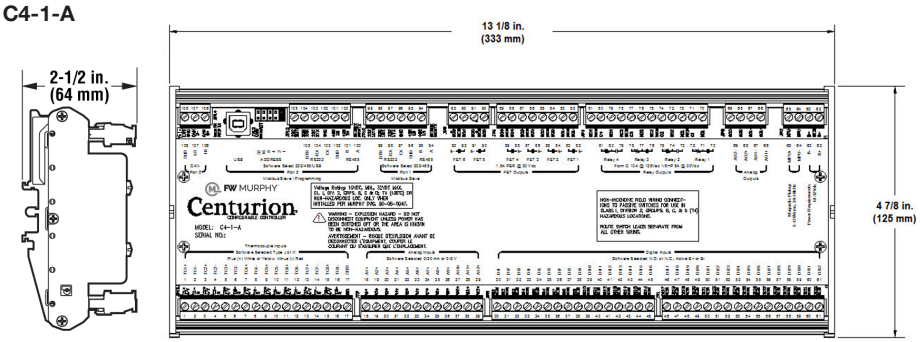

10-Inch VGA Touch Screen

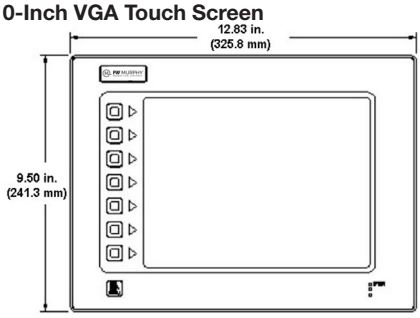

Unit is 2.2 in. (58.8 mm) deep.

How to Order

Select a Centurion Configurable Controller
C4-1-A

Specify any combination up to three Expansion I/O Modules
MX4 MX5-A

Specify One Display
MV-5-C LCD

6-inch VGA Touch Screen
10-inch VGA Touch Screen

The minimum system requirements:
C4-1-A Main I/O Module
Display capable of MODBUS communications

The FW Murphy MV-5-C Display Module is a highly integrated HMI for use with the Centurion system and is recommended for most customers.

Some systems may require additional I/O which is available on the MX4 or MX5-A expansion I/O modules.

Part Number	Model and Description	Notes
Specify Model	C4-1-A, Centurion Controller	
	MV-5-C, Monochrome display	Standard with auto sync
	6-inch VGA touch screen	Requires additional software
	10-inch VGA touch screen	Requires additional software
	MX4 expansion I/O module	
	MX5-A expansion I/O module	
50000774	Ignition noise (choke) filter	
00000504	C4-1-A Plug kit	Printed replacement terminal plugs for main I/O module
00030867	MX4 Plug kit	Printed replacement terminal plugs for MX4 expansion I/O module
00030868	MX5 Plug kit	Printed replacement terminal plugs for MX5 expansion I/O module

Centurion™ C5 Configurable Controller

The Centurion Configurable Controller is a control and monitoring system. Primarily designed for engine/electric motor-driven compressors, the Centurion is well suited for many control applications using standard configurations to save money and reduce training. Additionally, we can custom design a control package to meet exact specifications for a variety of applications.

The Centurion continuously monitors input signals and set points and commands outputs to maintain proper operation. When an out-of-limits event occurs, the controller will stop, shut down or control equipment to change conditions. The auto-start capabilities of the Centurion allow for start/stop based on parameters such as pressure set points or by digital signals.

The Centurion provides real-time data via communication ports to a connected display and/or supervisory system. This advanced system offers multiple options for remote communications and operation including HMIs, PLCs, PCs and SCADA systems. The industry standard MODBUS RTU protocol means greater support for a wide variety of communication equipment including radio and satellite communications systems.

Features

- Fully configurable control and monitoring system. Applications include reciprocating/screw compressors and pump systems.
- Expandable system to meet most three-to four-stage compressor applications.
- User configurability with Windows-based software allows the operator to point and click to implement standard processes. All I/O points can be custom configured.
- No programming experience required.
- Local and remote communications, MODBUS RTU via RS485/232/Ethernet.
- USB 1.1/2.0 support for laptops without a serial port.
- Upload/download capabilities for configurations and set points.
- Shut-down history list (Last 20 events).
- Event history list (Last 32 events).
- Active alarm list.
- 10 configurable maintenance timers.
- Run hourmeter.
- Support for no-flow totalization using lubricator pulses.
- Short cycle start protection / starts per hour (electric motor).
- Eight control loops, closed loop PID / open loop linear.
- Configuration templates provided for simple use.
- Configurations stored in non-volatile Flash memory.
- Set points stored in non-volatile EEPROM memory.
- CAN capable, to support electronic engines.
- Same core module for Centurion Configurable and Centurion Custom applications.
- View EICS and Centurion systems on one M-VIEW Touch screen display.
- Diagnostics that reduce troubleshooting.
- World-class certifications and harmonized international standards.
- Future-proof and backward compatible.
- All non-incendive inputs.
- Compressor Rod Load calculation, alarm and shutdown.

Basic Components

The Centurion consists of a display module, a main I/O module and optional expansion I/O module and choice of M-VIEW Series displays. No special cables are required. The Centurion is designed for use within a weatherproof enclosure only.

C5-1, Main I/O Module: Choose from
Centurion Configurable applications - Standard
Centurion Custom applications - Option

(Optional) MX4-R2 Expansion I/O Module:

(Optional) MX5-R2 Expansion I/O Module:

Display: Choose from
MV-5-C
MV-7T
MV-10T

In order to consistently bring you the highest quality, full-featured products, we reserve the right to change our specifications and designs at any time. FW MURPHY product names and the FW MURPHY logo are registered trademarks. This document, including textual matter and illustrations, is copyright protected with all rights reserved. (c) 2019 FW MURPHY. A copy of our limited warranty may be viewed or printed by going to www.fwmurphy.com/warranty.

ATTACHMENT A-39
Wagner Equipment
Exhibit "A"

C5-1 Main I/O Module

- Operating temperature: 40° to 185° F (-40° to 85° C)
- Power input: 30 W max 10-30 VDC
- Configuration: PC-based Centurion Configuration Software
- Application firmware:
  - Standard offers a user-configurable experience
  - Centurion Custom option offers highly customized applications. Centurion programmable - integrates with Rockwell Automation Processors as I/O module to write IEC 61131-3 logic (Ladder Logic, Structured Text, Function Block Diagram).
- All I/O options individually software selectable. No jumpers required.
- 12 Analog inputs*:
  - 0-24 mA or 0-5 VDC, 15-bit hardware
  - 4 configurable for resistive potentiometer measurement
- 32 Digital inputs*:
  - NO or NC (active high/active low) non-incendive
  - Optically isolated DC digital inputs (active high/active low) with LED indicators
  - Polarity sense / wire fault detection on normally closed systems
  - Approved for use with general purpose switches in hazardous areas
- Eight temperature inputs*:
  - J or K Type Thermocouples, 3-wire
    100Ω Pt RTD temperature inputs***
  - Open, short DC-, short DC+ wire fault detection
  - Cold junction compensation
- One magnetic pickup input/AC run signal:
  - 30 to 10 kHz, 4.5 VAC rms min, 120 VAC rms max.
- 10 digital outputs:
  - LED indicators:
  - 4 relay outputs, form C, dry contacts
  - 4 FET outputs (source)
  - 2 FET outputs (sink)
- Four analog outputs:
  - 4-20 mA, 16-bit hardware
- 11 Communication ports:
  - Two SERIAL RS232:
    > Protocol: MODBUS RTU (slave)
  - Two SERIAL RS485:
    > Protocol: MODBUS RTU (slave)
  - One USB: Host Type A (data log access, firmware updates)
  - One USB: Slave Type B (configuration/firmware updates)
  - Two CAN:
    > One proprietary for FW Murphy hardware
    > One reserved for J1939 Engine ECU
  - Two Ethernet 10/100 (DLR):
    > Protocol: Modbus TCP/IP (slave)
    > EtherNet/IP (CIP)
  - One WiFi: Optional
- Third-party approvals:
  - North America:
  - Class 1, Div 2, Grps A, B, C, D Haz. Loc. T4
  - Class I, Zone 2, AEx ec [ic] nC IIC T4 Gc Ex ec [ic] nC IIC T4 Gc X
  - ATEX Zone 2
    II 3G Ex ec [ic] nC IIC T4 Gc
    DEMKO 18 ATEX 1926X
    -40°C ≤ Tamb ≤ +85°C
  - IECEx Zone 2
    Ex ec [ic] nC IIC T4 Gc
    IECEx UL 18.0072X
    -40°C ≤ Tamb ≤ +85°C

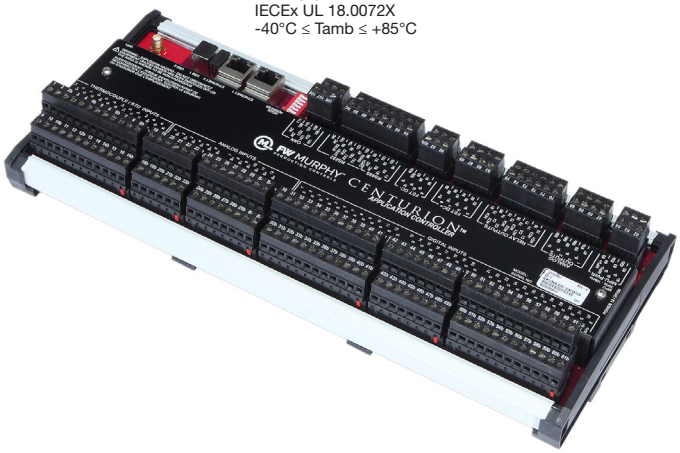

Expansion I/O Modules

MX4-R2 Expansion I/O Module

- Operating Temperature: 40° to 185° F (-40° to 85° C)
- Power input: 14.1 W max 10-30 VDC
- Configuration: PC-based Centurion Configuration Software
- 18* thermocouple inputs: J or K Type thermocouples, 9* 3-wire
  100Ω Pt RTD temperature inputs***
- Open, short DC-, Short DC+ wire fault detection
- Cold junction compensation
- One magnetic pickup input / AC Run Signal: 4.5 VAC – 120 VAC, 30 Hz – 10 kHz
- Third-party approvals:
  - Class 1, Div 2, Grps A, B, C, D Haz. Loc. T4
  - Class I, Zone 2, AEx ec [ic] IIC T4 Gc Ex ec [ic] IIC T4 Gc X
  - ATEX Zone 2
    II 3G Ex ec [ic] IIC T4 Gc
    DEMKO 18 ATEX 1926X
    -40°C ≤ Tamb ≤ +85°C
  - IECEx Zone 2
    Ex ec [ic] IIC T4 Gc
    IECEx UL 18.0072X
    -40°C ≤ Tamb ≤ +85°C

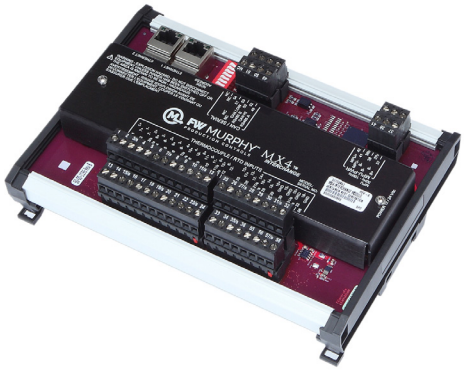

MX5-R2 Expansion I/O Module

- Operating temperature: 40° to 185° F (-40° to 85° C)
- Power input: 16.5 W max 10-30 VDC
- Configuration: PC-based Centurion Configuration Software
- 24++* Digital inputs:
  - NO or NC (active high/active low) non-incendive
  - Optically isolated DC digital inputs (active high/active low) with LED indicators
  - Polarity sense / wire fault detection on normally closed systems
  - Approved for use with general purpose switches in hazardous areas
- 10* analog inputs: 0-24 mA or 0-5 VDC, 15 bit hardware.
- 6 std. config./ 16++* digital outputs: FET (sink).
- 4 analog outputs: 4-20 mA, 16 bit hardware.
- 1 magnetic pickup input* /AC Run Signal: 4.5 VAC -120 VAC, 30 Hz to 10 kHz
- Third-party approvals:
  - Class 1, Div 2, Grps A, B, C, D Haz. Loc. T4
  - Class I, Zone 2, AEx ec [ic] IIC T4 Gc Ex ec [ic] IIC T4 Gc X
  - ATEX Zone 2
    II 3G Ex ec [ic] IIC T4 Gc
    DEMKO 18 ATEX 1926X
    -40°C ≤ Tamb ≤ +85°C
  - IECEx Zone 2
    Ex ec [ic] IIC T4 Gc X
    IECEx UL 18.0072X
    -40°C ≤ Tamb ≤ +85°C

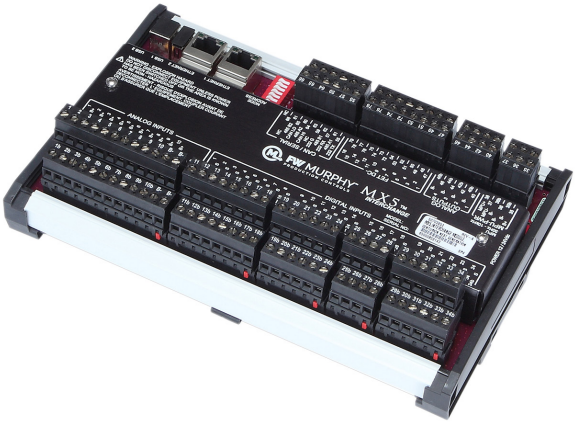

* Non-incendive.

++ Applies only to Centurion™ Custom and Rockwell Automation® Processor configurations.

*** RTD=Resistive Temperature Device, American RTD Standard, TCR 0.00392, units Ohms/Ohm / deg. between 0-100 C.

MV-5-C, M-VIEW Monochrome LCD Display

- Operating temperature: -40° to 185° F (-40° to 85° C)
- Power input: 11 W max 10-30 VDC
- Screen: 320 x 240 pixels, LCD display with backlight
- User interface: 12-key keypad set point entry, alarm acknowledgment, start, stop, reset, etc.
- Communications:
  - RS232-1/RS485-1 (MODBUS RTU master)
  - RS485-2 (MODBUS RTU slave)
  - 1 USB Slave Type B (firmware updates)
  - 1 USB Host Type A (reserved)
  - CAN x 2
    - >1 proprietary for FW Murphy Hardware
    - >1 reserved for J1939 engine ECU
- Customizable process screens (up to nine):
  - Line by line
  - Gage
  - Control loop
  - Generic register
- Built-in screens (examples):
  - Digital input status and polarity
  - Digital output status
  - Temperature input status/fault
  - Fault snapshot (mirror of line by line)
  - Alarm log
  - Event Log
- Third-party approvals: MV-5-C
  - North America:
  - Class 1, Div 2, Grps A, B, C, D Haz. Loc. T4
  - Class I, Zone 2, AEx ec ic [ic] IIC T4 Gc Ex ec ic [ic] IIC T4 Gc X
  - ATEX Zone 2
    - II 3G Ex ec ic [ic] IIC T4 Gc
    - DEMKO 18 ATEX 1926X
    - -40°C ≤ Tamb ≤ +85°C
  - IECEx Zone 2
    - Ex ec ic [ic] IIC T4 Gc
    - IECEx UL 18.0072X
    - -40°C ≤ Tamb ≤ +85°C

MV-7T and MV-10T, M-VIEW Touch Series Displays

- Operating temperature: -4° to 140° F (-20° to 60° C)
- Power input:
  - MV-7T, 15 W max 10-30 VDC (36 W max with modules)
  - MV-10T, 22 W max 10-30 VDC (52 W max with modules)
- Screen (sunlight readable):
  - MV-7T, 800x480 pixels, 7” widescreen
  - MV-10T, 640x480 pixels, 10.4” screen
- User interface: resistive analog touchscreen
- Communication interface
  - 2x RS232
  - 1x RS485
  - 2x USB host type A (file transfer, datalogging, USB device)
  - 1x USB slave (program/firmware updates)
  - 2 Ethernet 10/100 Base TX (RJ45)
- Communication protocols:
  - EtherNet/IP (CIP)
  - Modbus TCP/IP
  - Modbus RTU standard
  - 300 plus available, web server
- Third-party approvals:
  - Class 1, Division 2
  - ATEX Zone 2
  - IECEx Zone 2, IP66 (face)
  - Outdoor (face)

Dimensions

MV-5-C Display

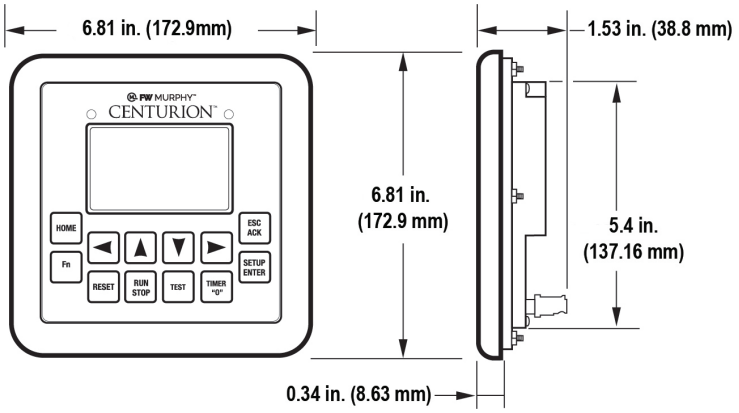

MV-7T Display

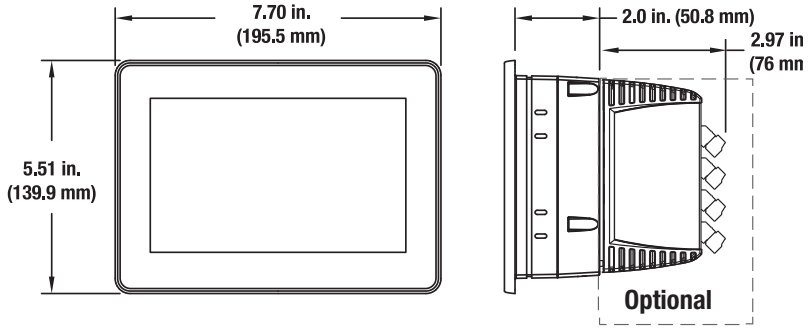

MV-10T Display

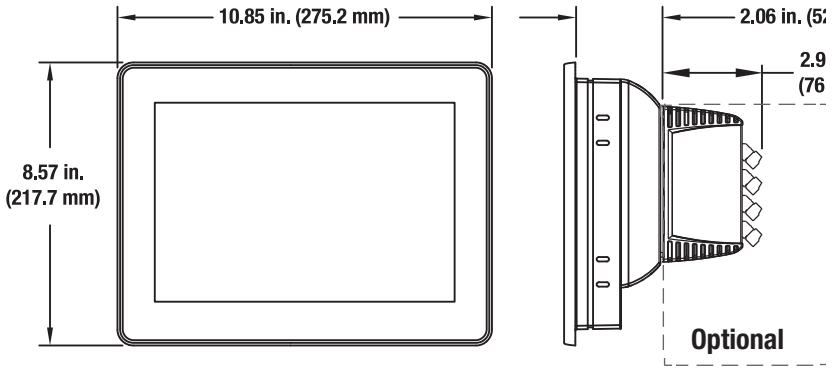

C5-1 Main Module

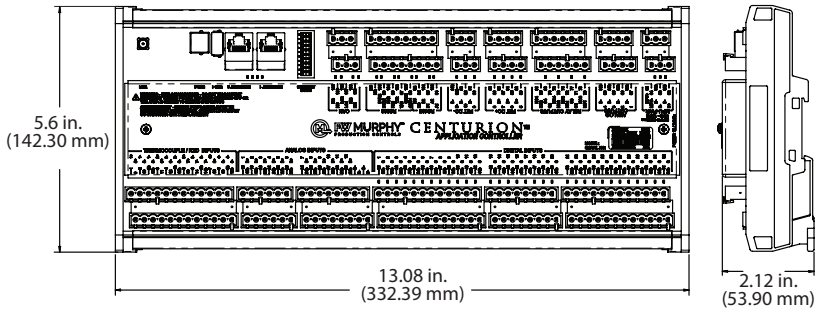

How to Order

(1) Select a Centurion Configurable Controller
- C5-1Main Module

(2) Specify expansion i/o modules (optional)
- MX4-R2 or MX5-R2

(3) Specify a display model
- MV-5-C
- MV-7T
- MV-10T

The minimum system requirements:
- C5-1 Main I/O Module
- Display capable of MODBUS communications

The FW Murphy M-VIEW Series displays are highly integrated HMIs for use with the Centurion system and are recommended for most customers.

Some systems may require additional I/O which is available on the MX4-R2 or MX5-R2 expansion I/O modules.

Part Number	Description	Notes
Specify Model	C5-1, Centurion Controller (Main Module)	Centurion Configurable - Standard Centurion Custom - Option
	MV-5-C, (5 in. monochrome display)	Standard, Auto sync to C5-1
	MV-7T, (7 in. touch, full-color display)	Optional, Auto sync to C5-1
	MV-10T, (10 in. touch, full-color display)	
50703852	MX4-R2 expansion I/O module	Optional
50703853	MX5-R2 expansion I/O module	
50000774	Ignition noise (choke) filter	
00032696	C5-1 Plug kit	Printed replacement terminal plugs for main I/O module
00030867	MX4-R2 Plug kit	Printed replacement terminal plugs for MX4-R2 expansion I/O module
00030868	MX5-R2 Plug kit	Printed replacement terminal plugs for MX5-R2 expansion I/O module
50702313	Centurion configuration tool for user application setup	Centurion configuration tool is software for modifying sequence of operation, set points, timers, faults and displays for Centurion. Includes file transfer utilities for configuration and upgrades.

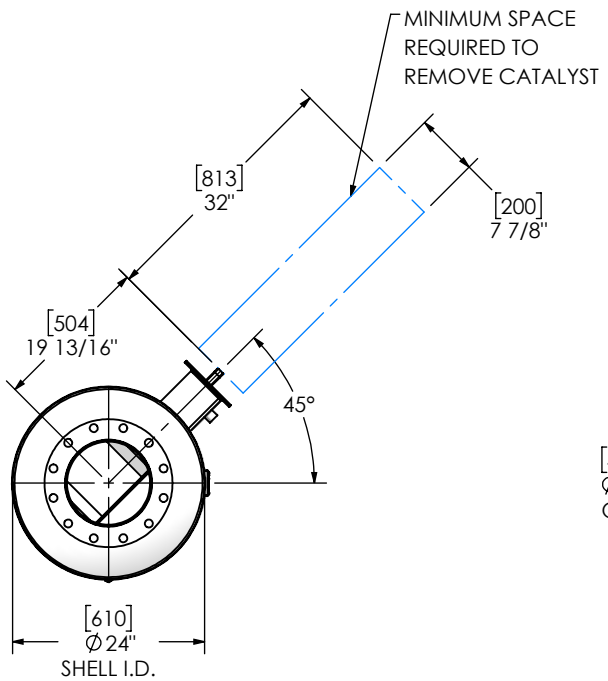

FRONT VIEW

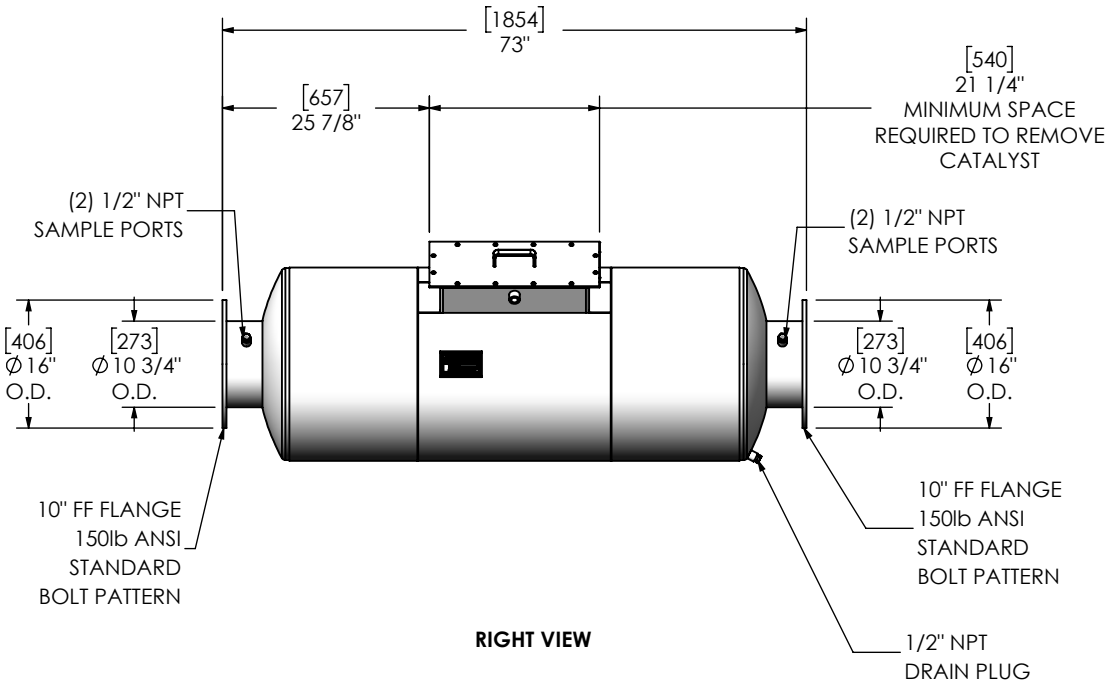

RIGHT VIEW

EXHAUST FLOW

NOTES:

- TRACKS CANNOT BE ROTATED IN FIELD (MODEL NUMBER DESIGNATES TRACK ORIENTATION)
- DO NOT USE EQUIPMENT TO SUPPORT OTHER PARTS OF THE EXHAUST SYSTEM WITHOUT PROPER REINFORCEMENT
- ESTIMATED CATALYST WEIGHT 55 LBS EA
- HORIZONTAL MOUNTING ONLY

MATERIAL CONSTRUCTION:

- CARBON STEEL

PAINT:

- HIGH TEMPERATURE BLACK (MIRATECH COATING SYSTEM 1)

PROJECT NAME	**PROPRIETARY AND CONFIDENTIAL**	DIMENSIONS ARE APPROXIMATE IN INCHES UNLESS OTHERWISE SPECIFIED	MIRATECH				
PROPOSAL NUMBER	THE INFORMATION CONTAINED IN THIS DRAWING IS THE SOLE PROPERTY OF MIRATECH GROUP, LLC. ANY REPRODUCTION IN PART OR AS A WHOLE WITHOUT THE WRITTEN PERMISSION OF MIRATECH GROUP, LLC IS PROHIBITED.	DIMENSIONAL TOLERANCES UNLESS OTHERWISE SPECIFIED ANGLES MACH: ±2° BEND: ±3° INCHES: ±0.125 MILLIMETERS: ±3	**FLR24-1C1822-10EE-2 Sales Drawing**				
SALES ORDER NO.		DO NOT SCALE DRAWING					
CUSTOMER P.O.		DRAWN SSC / DATE 9/27/2018	DRAWING FLR24-1C1822-10EE-2 SD				REV 0
		REVIEWED BY MSC / DATE 9/27/2018	SIZE A	SCALE 1:24	WEIGHT: 316 lb EMPTY	SHEET 1 OF 1	

Effective with sales to the first user on or after August 1, 2016

CATERPILLAR LIMITED WARRANTY

Industrial, Petroleum, Locomotive, and Agriculture Engine Products and Electric Power Generation Products

Worldwide

Caterpillar Inc. or any of its subsidiaries ("Caterpillar") warrants new and remanufactured engines and new and rebuild electric power generation products sold by it (including any products of other manufacturers packaged and sold by Caterpillar), to be free from defects in material and workmanship.

This warranty does not apply engines sold for use in on-highway vehicle or marine applications; engines in machines manufactured by or for Caterpillar; C175, 3500 and 3600 series engines used in locomotive applications; 3000 Family engines, C0.5 through C4.4 and ACERT™ (C6.6, C7, C7.1, C9, C9.3, C11, C13, C15, C18, C27, and C32) engines used in industrial, mobile agriculture and locomotive applications; or Cat® batteries; or Electric Power Generation Products manufactured or assembled in India. These products are covered by other Caterpillar warranties.

This warranty is subject to the following:

Warranty Period

- For industrial engines, engines in a petroleum applications or Petroleum Power Systems (excluding petroleum fire pump application), or engines in a Locomotive application, or Uninterruptible Power Supply (UPS) systems, the warranty period is 12 months after date of delivery to the first user.
- For engines used in petroleum fire pump and mobile agriculture applications the warranty period is 24 months after date of delivery to the first user.
- For controls only (EPIC), configurable and custom switchgear products, and automatic transfer switch products, the warranty period is 24 months after date of delivery to the first user.
- For new CG132, CG170 and CG260 series power generation products the warranty period is 24 months/16,000 hours, whichever comes first, after date of delivery to first user.
- For electric power generation products other than CG132, CG170 and CG260 series in prime or continuous applications the warranty period is 12 months. For standby applications the warranty period is 24 months/1000 hours. For emergency standby applications the warranty period is 24 months/400 hours. All terms begin after date of delivery to the first user.
- For Caterpillar rebuild electric power generation products the warranty period is 12 months, but not to exceed 24 months from shipment of rebuilt electric power generation product from Caterpillar.
- For all other applications the warranty period is 12 months after date of delivery to the first user.

Caterpillar Responsibilities

If a defect in material or workmanship is found during the warranty period, Caterpillar will, during normal working hours and at a place of business of a Cat dealer or other source approved by Caterpillar:

- Provide (at Caterpillar's choice) new, Remanufactured, or Caterpillar approved repaired parts or assembled components needed to correct the defect.

Note: New, remanufactured, or Caterpillar approved repaired parts or assembled components provided under the terms of this warranty are warranted for the remainder of the warranty period applicable to the product in which installed as if such parts were original components of that product. Items replaced under this warranty become the property of Caterpillar.

- Replace lubricating oil, filters, coolant, and other service items made unusable by the defect.
- Provide reasonable and customary labor needed to correct the defect, including labor to disconnect the product from and reconnect the product to its attached equipment, mounting, and support systems, if required.

For new 3114, 3116, and 3126 engines and, new and Caterpillar rebuild electric power generation products (which includes the following: any new products of other manufacturers packaged and sold by Caterpillar)

- Provide travel labor, up to four hours round trip, if in the opinion of Caterpillar, the product cannot reasonably be transported to a place of business of a Cat dealer or other source approved by Caterpillar (travel labor in excess of four hours round trip, and any meals, mileage, lodging, etc. is the user's responsibility).

For all other products:

- Provide reasonable travel expenses for authorized mechanics, including meals, mileage, and lodging, when Caterpillar chooses to make the repair on-site.

User Responsibilities

The user is responsible for:

- Providing proof of the delivery date to the first user.
- Labor costs, except as stated under "Caterpillar Responsibilities," including costs beyond those required to disconnect the product from and reconnect the product to its attached equipment, mounting, and support systems.
- Travel or transporting costs, except as stated under "Caterpillar Responsibilities."
- Premium or overtime labor costs.
- Parts shipping charges in excess of those that are usual and customary.
- Local taxes, if applicable.
- Costs to investigate complaints, unless the problem is caused by a defect in Caterpillar material or workmanship.
- Giving timely notice of a warrantable failure and promptly making the product available for repair.
- Performance of the required maintenance (including use of proper fuel, oil, lubricants, and coolant) and items replaced due to normal wear and tear.
- Allowing Caterpillar access to all electronically stored data.

Limitations

Caterpillar is not responsible for:

- Failures resulting from any use or installation that Caterpillar judges improper.
- Failures resulting from attachments, accessory items, and parts not sold or approved by Caterpillar.
- Failures resulting from abuse, neglect, and/or improper repair.
- Failures resulting from user's delay in making the product available after being notified of a potential product problem.
- Failures resulting from unauthorized repairs or adjustments, and unauthorized fuel setting changes.
- Damage to parts, fixtures, housings, attachments, and accessory items that are not part of the engine, Cat Selective Catalytic Reduction System or electric power generation product (including any products of other manufacturers packaged and sold by Caterpillar).
- Repair of components sold by Caterpillar that is warranted directly to the user by their respective manufacturer. Depending on type of application, certain exclusions may apply. Consult your Cat dealer for more information.

(Continued on reverse side…)

ATTACHMENT A
Services Agreement No. ACFR19-39
Wagner Equipment
Exhibit "A"

This warranty covers every major component of the products. Claims under this warranty should be submitted to a place of business of a Cat dealer or other source approved by Caterpillar. For further information concerning either the location to submit claims or Caterpillar as the issuer of this warranty, write Caterpillar Inc., 100 N. E. Adams St., Peoria, IL USA 61629.

Caterpillar's obligations under this Limited Warranty are subject to, and shall not apply in contravention of, the laws, rules, regulations, directives, ordinances, orders, or statutes of the United States, or of any other applicable jurisdiction, without recourse or liability with respect to Caterpillar.

A) For products operating outside of Australia, Fiji, Nauru, New Caledonia, New Zealand, Papua New Guinea, the Solomon Islands and Tahiti, the following is applicable:

NEITHER THE FOREGOING EXPRESS WARRANTY NOR ANY OTHER WARRANTY BY CATERPILLAR, EXPRESS OR IMPLIED, IS APPLICABLE TO ANY ITEM CATERPILLAR SELLS THAT IS WARRANTED DIRECTLY TO THE USER BY ITS MANUFACTURER.

THIS WARRANTY IS EXPRESSLY IN LIEU OF ANY OTHER WARRANTIES, EXPRESS OR IMPLIED, INCLUDING ANY WARRANTY OF MERCHANTABILITY OR FITNESS FOR A PARTICULAR PURPOSE, EXCEPT CATERPILLAR EMISSION-RELATED COMPONENTS WARRANTIES FOR NEW ENGINES, WHERE APPLICABLE. REMEDIES UNDER THIS WARRANTY ARE LIMITED TO THE PROVISION OF MATERIAL AND SERVICES, AS SPECIFIED HEREIN.

CATERPILLAR IS NOT RESPONSIBLE FOR INCIDENTAL OR CONSEQUENTIAL DAMAGES.

CATERPILLAR EXCLUDES ALL LIABILITY FOR OR ARISING FROM ANY NEGLIGENCE ON ITS PART OR ON THE PART OF ANY OF ITS EMPLOYEES, AGENTS OR REPRESENTATIVES IN RESPECT OF THE MANUFACTURE OR SUPPLY OF GOODS OR THE PROVISION OF SERVICES RELATING TO THE GOODS.

IF OTHERWISE APPLICABLE, THE VIENNA CONVENTION ON CONTRACTS FOR THE INTERNATIONAL SALE OF GOODS IS EXCLUDED IN ITS ENTIRETY.

For personal or family use engines or electric power generation products, operating in the USA, its territories and possessions, some states do not allow limitations on how long an implied warranty may last nor allow the exclusion or limitation of incidental or consequential damages. Therefore, the previously expressed exclusion may not apply to you. This warranty gives you specific legal rights and you may also have other rights, which vary by jurisdiction. To find the location of the nearest Cat dealer or other authorized repair facility, call (800) 447-4986. If you have questions concerning this warranty or its applications, call or write:

In USA and Canada: Caterpillar Inc., Engine Division, P. O. Box 610, Mossville, IL 61552-0610, Attention: Customer Service Manager, Telephone (800) 447-4986. Outside the USA and Canada: Contact your Cat dealer.

B) For products operating in Australia, Fiji, Nauru, New Caledonia, New Zealand, Papua New Guinea, the Solomon Islands and Tahiti, the following is applicable:

THIS WARRANTY IS IN ADDITION TO WARRANTIES AND CONDITIONS IMPLIED BY STATUTE AND OTHER STATUTORY RIGHTS AND OBLIGATIONS THAT BY ANY APPLICABLE LAW CANNOT BE EXCLUDED, RESTRICTED OR MODIFIED ("MANDATORY RIGHTS"). ALL OTHER WARRANTIES OR CONDITIONS, EXPRESS OR IMPLIED (BY STATUTE OR OTHERWISE), ARE EXCLUDED. WITHOUT LIMITING THE FOREGOING PROVISIONS OF THIS PARAGRAPH, WHERE A PRODUCT IS SUPPLIED FOR BUSINESS PURPOSES, THE CONSUMER GUARANTEES UNDER THE CONSUMER GUARANTEES ACT 1993 (NZ) WILL NOT APPLY.

NEITHER THIS WARRANTY NOR ANY OTHER CONDITION OR WARRANTY BY CATERPILLAR, EXPRESS OR IMPLIED (SUBJECT ONLY TO THE MANDATORY RIGHTS), IS APPLICABLE TO ANY ITEM CATERPILLAR SELLS THAT IS WARRANTED DIRECTLY TO THE USER BY ITS MANUFACTURER.

IF THE MANDATORY RIGHTS MAKE CATERPILLAR LIABLE IN CONNECTION WITH SERVICES OR GOODS, THEN TO THE EXTENT PERMITTED UNDER THE MANDATORY RIGHTS, THAT LIABILITY SHALL BE LIMITED AT CATERPILLAR'S OPTION TO (a) IN THE CASE OF SERVICES, THE SUPPLY OF THE SERVICES AGAIN OR THE PAYMENT OF THE COST OF HAVING THE SERVICES SUPPLIED AGAIN AND (b) IN THE CASE OF GOODS, THE REPAIR OR REPLACEMENT OF THE GOODS, THE SUPPLY OF EQUIVALENT GOODS, THE PAYMENT OF THE COST OF SUCH REPAIR OR REPLACEMENT OR THE ACQUISITION OF EQUIVALENT GOODS.

CATERPILLAR EXCLUDES ALL LIABILITY FOR OR ARISING FROM ANY NEGLIGENCE ON ITS PART OR ON THE PART OF ANY OF ITS EMPLOYEES, AGENTS OR REPRESENTATIVES IN RESPECT OF THE MANUFACTURE OR SUPPLY OF GOODS OR THE PROVISION OF SERVICES RELATING TO THE GOODS.

CATERPILLAR IS NOT LIABLE FOR INCIDENTAL OR CONSEQUENTIAL DAMAGES UNLESS IMPOSED UNDER MANDATORY RIGHTS.

IF OTHERWISE APPLICABLE, THE VIENNA CONVENTION ON CONTRACTS FOR THE INTERNATIONAL SALE OF GOODS IS EXCLUDED IN ITS ENTIRETY.

C) For products supplied in Australia:

IF THE PRODUCTS TO WHICH THIS WARRANTY APPLIES ARE:

I. PRODUCTS OF A KIND ORDINARILY ACQUIRED FOR PERSONAL, DOMESTIC OR HOUSEHOLD USE OR CONSUMPTION; OR

II. PRODUCTS THAT COST AUD 40,000 OR LESS,

WHERE THOSE PRODUCTS WERE NOT ACQUIRED FOR THE PURPOSE OF RE-SUPPLY OR FOR THE PURPOSE OF USING THEM UP OR TRANSFORMING THEM IN THE COURSE OF PRODUCTION OR MANUFACTURE OR IN THE COURSE OF REPAIRING OTHER GOODS OR FIXTURES, THEN THIS SECTION C APPLIES.

THE FOLLOWING MANDATORY TEXT IS INCLUDED PURSUANT TO THE AUSTRALIAN CONSUMER LAW AND INCLUDES REFERENCES TO RIGHTS THE USER MAY HAVE AGAINST THE DIRECT SUPPLIER OF THE PRODUCTS: OUR GOODS COME WITH GUARANTEES THAT CANNOT BE EXCLUDED UNDER THE AUSTRALIAN CONSUMER LAW. YOU ARE ENTITLED TO A REPLACEMENT OR REFUND FOR A MAJOR FAILURE AND COMPENSATION FOR ANY OTHER REASONABLY FORESEEABLE LOSS OR DAMAGE. YOU ARE ALSO ENTITLED TO HAVE THE GOODS REPAIRED OR REPLACED IF THE GOODS FAIL TO BE OF ACCEPTABLE QUALITY AND THE FAILURE DOES NOT AMOUNT TO A MAJOR FAILURE. THE INCLUSION OF THIS TEXT DOES NOT CONSTITUTE ANY REPRESENTATION OR ACCEPTANCE BY CATERPILLAR OF LIABILITY TO THE USER OR ANY OTHER PERSON IN ADDITION TO THAT WHICH CATERPILLAR MAY HAVE UNDER THE AUSTRALIAN CONSUMER LAW.

TO THE EXTENT THE PRODUCTS FALL WITHIN THIS SECTION C BUT ARE NOT OF A KIND ORDINARILY ACQUIRED FOR PERSONAL, DOMESTIC OR HOUSEHOLD USE OR CONSUMPTION, CATERPILLAR LIMITS ITS LIABILITY TO THE EXTENT IT IS PERMITTED TO DO SO UNDER THE AUSTRALIAN CONSUMER LAW TO, AT ITS OPTION, THE REPAIR OR REPLACEMENT OF THE PRODUCTS, THE SUPPLY OF EQUIVALENT PRODUCTS, OR THE PAYMENT OF THE COST OF SUCH REPAIR OR REPLACEMENT OR THE ACQUISITION OF EQUIVALENT PRODUCTS.

THE WARRANTY SET OUT IN THIS DOCUMENT IS GIVEN BY CATERPILLAR INC. OR ANY OF ITS SUBSIDIARIES, 100 N. E. ADAMS ST, PEORIA, IL USA 61629, TELEPHONE 1 309 675 1000, THE USER IS RESPONSIBLE FOR ALL COSTS ASSOCIATED WITH MAKING A CLAIM UNDER THE WARRANTY SET OUT IN THIS DOCUMENT, EXCEPT AS EXPRESSLY STATED OTHERWISE IN THIS DOCUMENT, AND THE USER IS REFERRED TO THE BALANCE OF THE DOCUMENT TERMS CONCERNING CLAIM PROCEDURES, CATERPILLAR RESPONSIBILITIES AND USER RESPONSIBILITIES.

TO THE EXTENT PERMISSIBLE BY LAW, THE TERMS SET OUT IN THE REMAINDER OF THIS WARRANTY DOCUMENT (INCLUDING SECTION B) CONTINUE TO APPLY TO PRODUCTS TO WHICH THIS SECTION C APPLIES.

©2016 Caterpillar All Rights Reserved.
CAT, CATERPILLAR, their respective logos, "Caterpillar Yellow" the "Power Edge" trade dress as well as corporate and product identity used herein, are trademarks of Caterpillar and may not be used without permission.

ATTACHMENT A
Services Agreement No. ACFR19-39
Wagner Equipment
Exhibit "A"